ANEST IWATA

Instruction Manual

Maintenance Tools and Fixtures

OCX-867
(ISP-90)

This instruction manual includes important warnings, cautions, and instructions for safe and effective use of the scroll vacuum pump. Be sure to read this manual thoroughly and understand it fully before use. Keep it an appropriate place for immediate reference.

Important information

This is the instruction manual of exclusive tools (OCX-867) which are used when you maintain and inspect oil-free scroll vacuum pumps ISP-90. Be sure to read this instruction manual as well as instruction manual for the related scroll vacuum pumps in order to correctly understand its operation, functions and maintenance. The operator shall be fully conversant with the requirements stated within this instruction manual including important warnings, cautions and operation. Wrong operation (mishandling) can cause serious bodily injury, death, fire or explosion.

◆ About safety

Warnings and cautions are especially important for safe operation. Symbols and marks have the following meanings.

Examples of warnings and cautions

⚠ WARNING	Indicates a potentially hazardous situation which, if not avoided, may result in serious injury or loss of life.
⚠ CAUTION	Indicates a potentially hazardous situation which, if not avoided, may result in minor or moderate injury or property damage.

Examples of symbols

⚠	Indicates「you must be careful」. We will briefly explain in or near the symbol. (The example on the left is [Be careful about electric shock])
⊘	Indicates「you must not do」. We will briefly explain in or near the symbol. (The example on the left is [Never touch])
●	Indicates「you must do」. We will briefly explain in or near the symbol. (The example on the left is [Be sure to ground])

＊We shall not be responsible for any injury or damage caused by disregard of warnings, cautions or instructions.

Supplementary notes

Important	Indicates notes which we ask you to observe. They are helpful to achieve full performance and function of the equipment.

Contents

1. For safe operation

As the points below are very important for safe operation, be sure to fully read and understand before inspection and maintenance, and operate correctly.

⚠ WARNING

Pump clean gas	Never pump toxic, explosive, flammable, corrosive gases, chemicals, solvents or powders. ※When you inspect the pumps, flowing substances, explosion or fire can cause bodily injury.

Cut off electric source	Be sure to cut off electric source before wiring or inspection. ※ If not, it can cause electric shock or damage by turning section (Fan).
Do not alter	Never alter the equipment. ※If done, it can cause damage or shorten lifetime.
Install breaker	Prevent short-circuit by breaker of proper volume. ※If not, it can cause fire or electric shock.
Be sure to ground	Be sure to ground. ※If not, it can cause electric shock or fire.

⚠ CAUTION

Maintenance after Pump is cool	Do the maintenance after pump becomes fully cool. ※If not, it can cause burns.
Conduct periodic maintenance	Conduct periodic maintenance and inspections. ※If not, it can cause damage or shorter lifetime.
Never use solvent	Never use solvent when cleaning inside the pump and Tip Seal. ※If done, it can shorten lifetime.

Important

Use ISP exclusive grease	Be sure to use **ISP exclusive grease** for Bearings. ※Mixing with other oil can shorten grease lifetime and damage Bearings.
Avoid oil	Protect parts from oil and dust. ※ If not, it can deteriorate pump performance.

2． Names of Fixtures and Tools

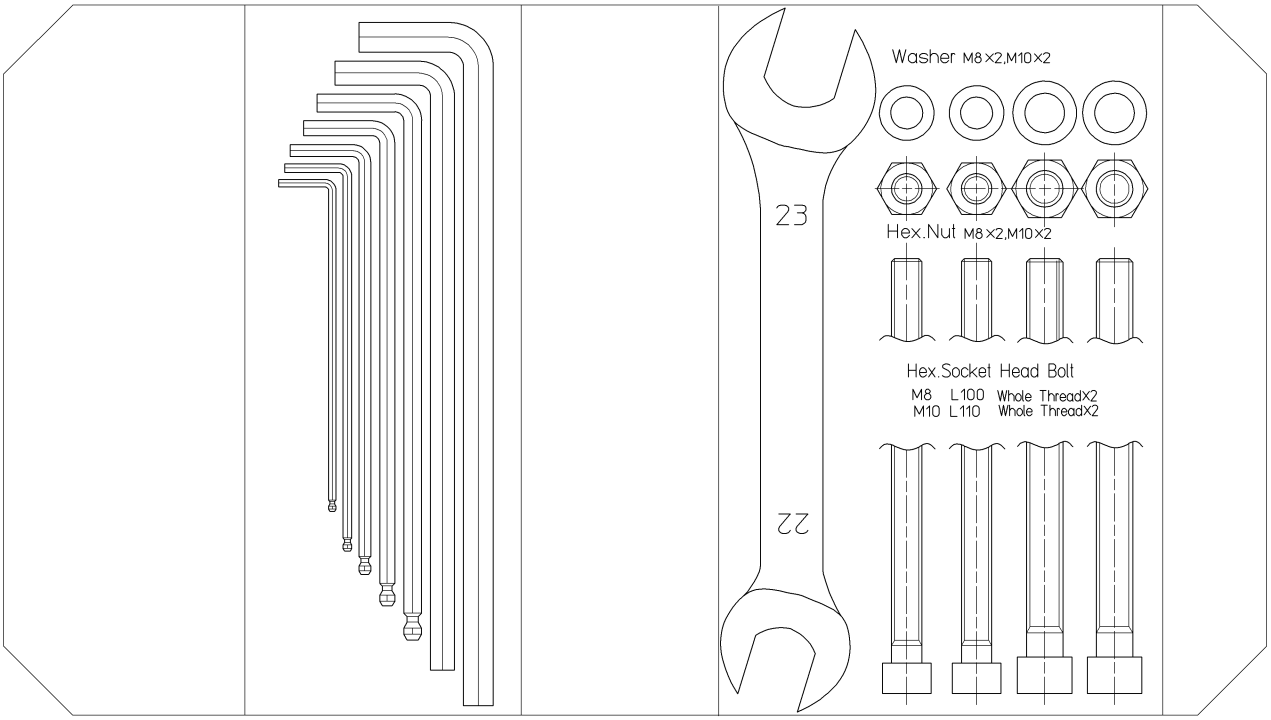

Hex.Bar Spanner
- Wrench Flat 10 Long Type
- Wrench Flat 8 Long Type
- Wrench Flat 6 Ball at Tip,Long Type
- Wrench Flat 5 Ball at Tip,Long Type
- Wrench Flat 4 Ball at Tip,Long Type
- Wrench Flat 3 Ball at Tip,Long Type
- Wrench Flat 2.5 Ball at Tip,Long Type

Spanner

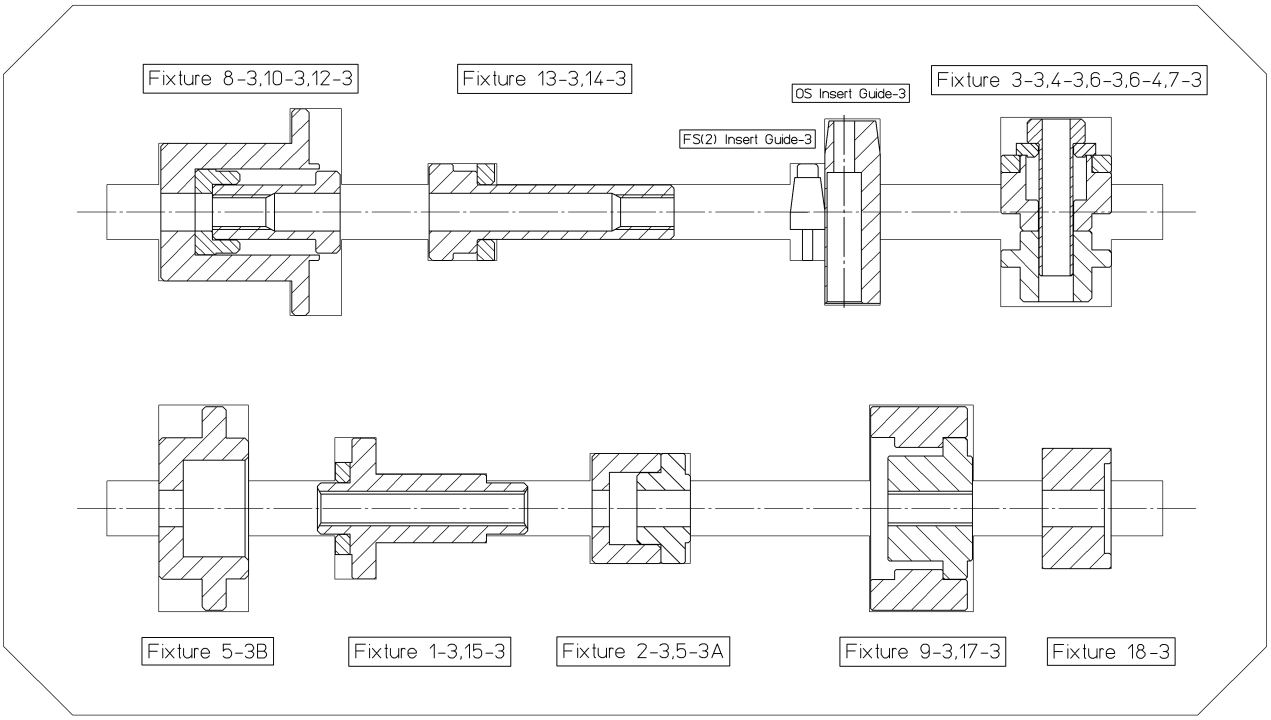

3. Preparation

3. 1 Check the product

①Check that model name is as you ordered (Model name is attached to side of package).
②Check that there is no shortage or damage. If so, contact the distributor who sold it to you.
③Check that accessory (instruction manual) is attached.

3. 2 Install Pump

Refer to an instruction manual of the pumps.

4. How to use

These are exclusive tools for doing the maintenance and inspection of Oil-Free Scroll Vacuum Pumps, ISP-90.

Important	**Negligence of maintenance can cause poor performance and failure.**	Conduct periodic maintenance

⚠ WARNING

Pay attention to the pump temperature

Do the maintenance after the pump fully cools.
Maintenance soon after the pump stoppage can cause burns and bodily injury.

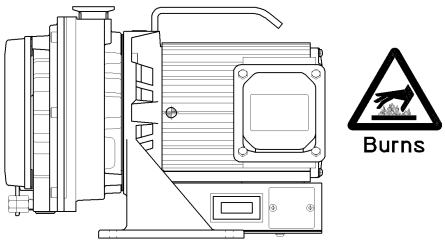

Cut off electric source

Be sure to cut off electric source before maintenance and inspection.
If not, it can cause electric shock or damage by turning section (Fan).

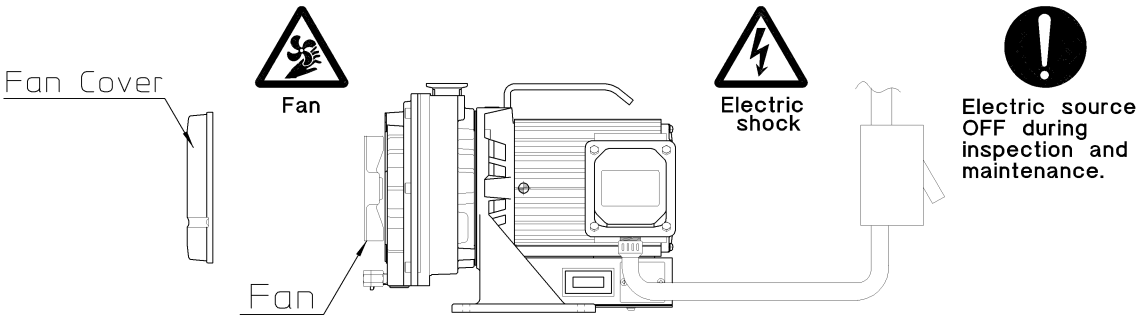

4．1 Maintenance standards

Do the maintenance according to maintenance standards which are shown in time and period, whichever comes first. Maintenance items at each point includes all items up to the time before. Do the maintenance carefully without missing any points.

Parts No.	Where to inspect	Maintenance standards			Remarks
		Annually or Every 8000hr	Every 2 years or Every 16000hr	Vapor pumping Every 400 times	
18	Needle bearing [FS(2)]	grease／△	○	△	Supply with Bearing kit
21	Needle bearing [OS]	grease／△	○	△	
31	Ball bearing [FS(1)]	△	○	△	
37	O ring [Pin crank・Needle bearing]	△	○	△	
38	Needle bearing [Pin crank]	grease／△	○	△	
53	Spider	△	○	△	
17	G-seal [FS(2)]	○	○	△	Supply with Seal kit
19	Shaft seal(2) [FS(2)]	○	○	△	
20	G-seal [OS]	○	○	△	
28 － 1	Shaft seal(1) [FS(1)]	○	○	△	
28 － 2	G-seal [FS(1)]	○	○	△	
107	Exhaust valve set	○	○	△	
23	O ring [FS(2)]	○	○	△	Supply with O ring set
25	O ring [Inlet flange]	○	○	△	
202	O ring [Outlet flange]	○	○	△	
101	Tip seal set(1)	△	○	△	Supply with Tip seal set
103	Tip seal set(2)	△	○	△	
104	Pin crank set	△	△	△	
306	Air flush set	○	○	○	

○. . . Replace
△. . . Replace if something goes wrong

Note) Be sure to use designated **ISP exclusive grease**.

Important

Causes of failure

Shorten maintenance interval if conditions of installation place or operation is inappropriate.
Especially ambient temperature has great influence on failure.
Maintenance interval is based on 5 ～ 40℃ ambient temperature and 25℃ average yearly ambient temperature.
Shorten maintenance interval if temperature is over it. If not, it can cause failure.
Maintenance interval is not a guarantee interval.

Shorten interval

4．2 Necessary items for maintenance

Prepare the following items before maintenance.

1. Block（large） 2 pcs.
   （55mm×55mm×length 250mm wood which does not damage pump）
2. Block（small） 1 pc.
   （20mm×10mm×length 250mm wood which does not damage pump）
3. Clean cloth
4. Spanners （・17mm wrench flat ・19mm wrench flat ・24mm wrench flat）
5. Torque wrench for bolt with hex. socket head
   ・for 3mm wrench flat which can measure 2.0N・m（20kgf・cm）torque
   ・for 4mm wrench flat which can measure 3.0N・m（30kgf・cm）torque
   ・for 5mm wrench flat and 6mm wrench flat which can measure15N・m（150kgf・cm）torque
6. Rubber mat which can prevent sliding
7. Straight edge screwdriver
8. Cross head screwdriver
   ・small for M3（tip shape No.1）
   ・medium for M4（tip shape No.2）
9. Cutter（Sharp knife）
10. LOCKTITE 242 or 542（medium strength）
11. Tweezers（more than 150 mm）
12. Bamboo spatula, Brass brush
13. ISP exclusive grease
14. Stop ring supplier
15. Vernier caliper
16. Ampere meter (Clamp meter)
17. Air compressor etc.
18. Pirani vacuum gauge
19. Leak detector

4．3 Pump structure

This Pump is a scroll type vacuum pump. An orbiting scroll (OS) rotates between a fixed scroll FS(1) and a fixed scroll FS(2) and the set of scrolls compresses air. FS(1) is on Motor side and FS(2) is on Fan Cover side.

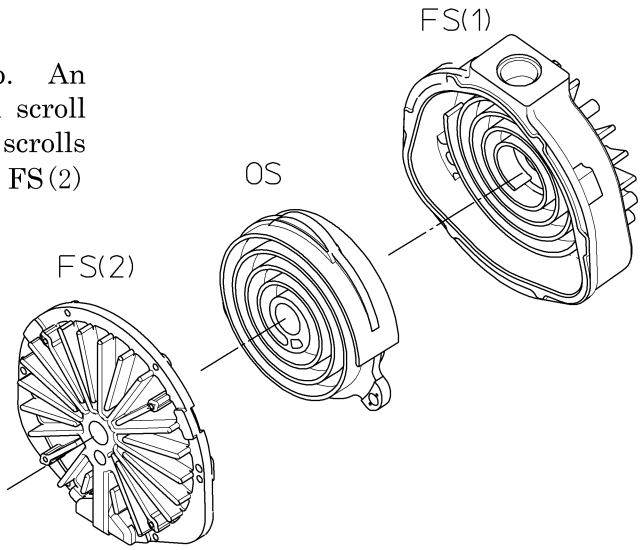

5. Annually or every 8000 hours maintenance and inspection

5.1 Disassembly

Important	Before disassembly, open Inlet to atmospheric pressure, repeat close-open operation for a couple of times in order to clean inside the pump, and cut off electric source.

Cut off electric source

⚠ WARNING	**Be sure to cut off electric source before maintenance or inspection.** If not, it can cause electric shock or bodily injury by turning section.

5.1.1 Remove Fan Cover

・Remove 3 Hex. socket head bolts which tighten Fan Cover, and remove Fan Cover and Cover Plate.

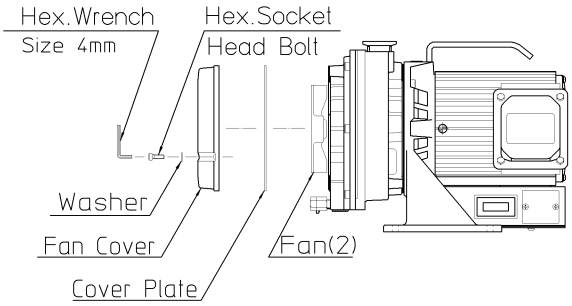

Important	**Rotate Fan by hand and check smooth rotation, and remember the feeling of rotating resistance.** When reassembling, check the slightly heavier rotating resistance. If rotation is not smooth, something will go wrong inside the pump. Check each Bearing and replace it if something goes wrong.

5.1.2 Remove Body set

・Place the pump vertically with Motor downwards.
・Remove Hex. socket head bolts which hold Motor set and FS(1), lift Body set and separate it from Motor set.

Important	**Rotate Motor Shaft by hand and check the smooth rotation.** If rotation is not smooth with some resistance, check Motor Bearings and Motor, and replace it if something goes wrong.

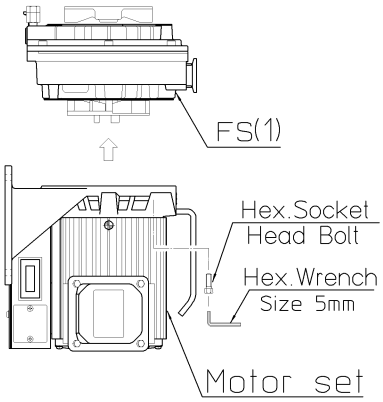

5.1.3 Remove Air Flush Port

・Remove Air flush port from the pump.

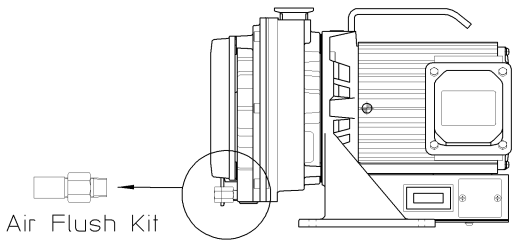

5.1.4 Disassembly of Body set

①Place Body set with FS(1) downwards on 2 blocks (wood which height is over 55mm).

②Remove Hex. socket head bolt which fixes Fan(2) on FS(2) side, and remove Washer(2), Fan(2) and Parallel Key.

③Loosen Hex. socket head bolts diagonally by turns which fix FS(2), and remove them.
・Pull FS(2) towards axis and remove it.
・Pull OS towards axis and remove it.

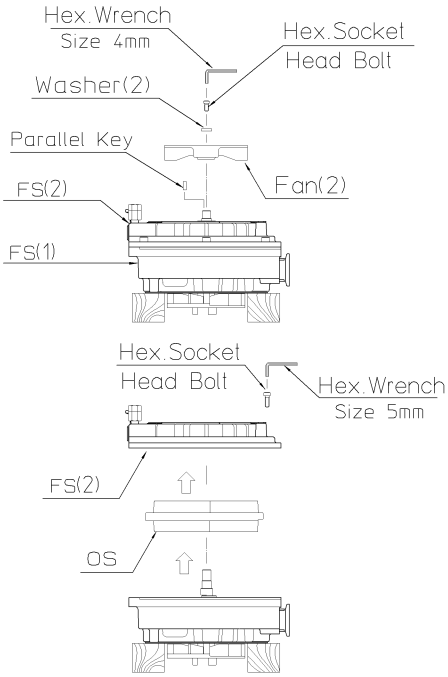

Important	**・When pulling FS(2) and OS, pay attention not to damage Needle Bearing or Shaft Seal with angle of Key groove of Crank Shaft.** **・When you cannot pull OS due to damaged OS Needle Bearing, first do ④ item , pull Crank Shaft and OS at the same time, and separate OS and Crank Shaft from FS(2) side .**

④Remove Hex. socket head bolts which holds Fan(1) on FS(1) side, and remove a Washer and Fan(1).
・Remove Parallel Key and pull Crank Shaft.

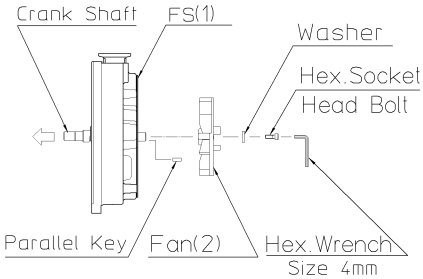

5.2 Clean Tip Seal

Important	**・Check that top of Tip Seal comes out from the groove of FS(1),FS(2) and OS** **・(by about 0.1mm) at any point.** **・If extrusion is less than 0.1mm at any point, replace all Tip Seals at the same time (refer to 6.7).** 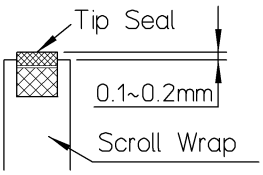 **Tip Seal height: 2.20～2.30mm**  **Check extrusion of Tip seal.** If it is not replaced, tip of scroll wrap contacts counter surface (bottom) and damages it, resulting in failure.

5.2.1 Remove Tip Seal

・Gradually remove old Tip Seal from the end of outer periphery edge.

Important	**・Remember each Tip Seal position to return it to original position.**

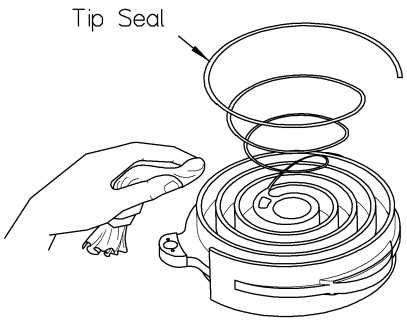

5.2.2 Clean Tip Seal

・Lightly wipe out both sides of Tip Seal while black sliding material facing upwards.

Important	**・If you feel resistance when removing Tip Seal, dust will attach to side and groove of Tip Seal. Wipe out dust from the groove and Tip Seal by using clean cloth and bamboo spatula.** **・Never use solvent.** ・It makes Tip Seal expand to clean too hard, which results in making it difficult to insert it into the groove.  **Never use solvent**

5.3 Maintenance of FS(1)

5.3.1 Remove Bearing set(1)

①Remove Hex. socket head bolts which hold Bearing set(1).

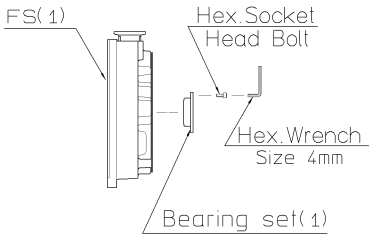

② Insert 2 straight edge screwdrivers under outer dia. of Bearing set(1), lift it up and remove it.

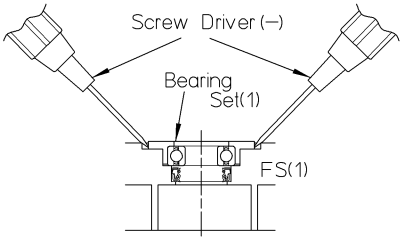

5.3.2 Remove G-seal and Shaft Seal(1)

・Insert straight edge screwdriver to G-seal from the scroll side, hit the screwdriver and remove it.
・Insert **Fixture 1-3** to Shaft Seal(1) from scroll side, fit **Fixture 5-3B** to FS(1) from the opposite side, and screw **M10** Hex. socket head bolt with Washer, and Hex. nut .
・Turn Hex. nut and remove Shaft Seal(1).

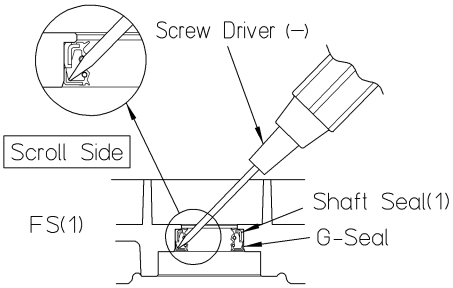

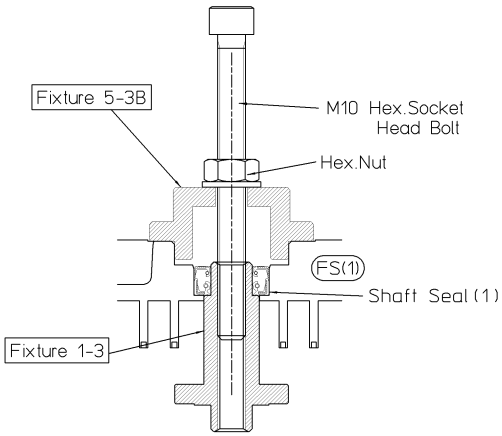

Important	**・Check direction of Shaft Seal(1).** Side of Shaft Seal(1) where you can see spring faces G-seal. **・Pay attention to direction of Fixture 1.** Check direction of **Fixture 1** in the drawing above. **・Remove Shaft Seal(1) toward the Fin side (opposite side of scroll).**	**Check direction of Shaft seal(1) and Fixture**

5.3.3 Clean FS(1)

①Wipe out dust on the place where Bearing of FS(1) and Shaft Seal(1) enter.
・Wipe out dust on wall and bottom of scroll wrap, inside the Inlet Flange and Inlet Filter with clean cloth.
・Wipe out dust on side and bottom of Tip Seal groove by using clean cloth and bamboo spatula.
・Wipe out dust which remains at Pin Crank and inner wall of FS(1).
・Blow out the whole unit with air.

Important	**・If you feel some resistance to remove Tip Seal , be sure to wipe out dust.** **・Be sure to clean Tip Seal groove with soft bamboo spatula since groove is fragile.** **・Always use clean cloth.** Mixing with other grease can greatly deteriorate its performance. **・Pay attention not to leave the waste thread in the Bearings.**

②Turn Pin Crank by hand and check that it turns lightly and smoothly.
・If you feel rumble when turning by hand, replace all Pin Crank with new one.
③When replacing Pin Crank set, remove two screws with cross head screwdriver.
・Wipe out adhesives and dust around screws.
・Fit new Pin Crank set and tighten by **screws with slight amount of LOCKTITE 242 or 542.**

Important	**・Use LOCKTITE 242 or 542 (medium strength).** **・Apply slight amount of LOCKTITE to thread section.** **・Wipe out extruded LOCKTITE with clean cloth.**

5.3.4 Fit Shaft Seal (1)

①Apply slight amount of **LOCKTITE 242 or 542 to outer periphery of new Shaft Seal(1).**

②Insert **Fixture 15-3** and Shaft Seal (1) to **Fixture 1-3** and fit it to FS (1) from the Fin side .

・Fit **Fixtures 2-3 and 5-3A** in this order to FS (1) from scroll side, and screw **M10** Hex. socket head bolt along with Hex. nut and Washer.

③Turn Hex. nut and fit Shaft Seal (1).

④Wipe out extruded LOCKTITE with clean cloth.

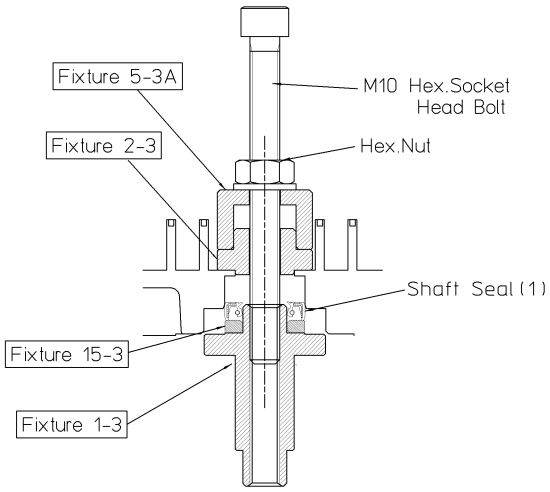

Important	**・Pay attention to direction of Fixtures and Shaft Seal(1).** Side of Shaft Seal (1) where you can see spring faces Fixture. **・Wipe out extruded LOCKTITE with clean cloth.**	**Check directions of Fixture and Shaft seal(1)**

5.3.5 Fit G-seal

①Insert G-seal to **Fixture 1-3** and fit it to FS(1) from the Fin side.

・Fit **Fixtures 2-3 and 5-3A** in this order to FS(1) from scroll side, and screw **M10** Hex. socket head bolt along with Hex. nut and Washer.

②Turn Hex. nut and fit G-seal.

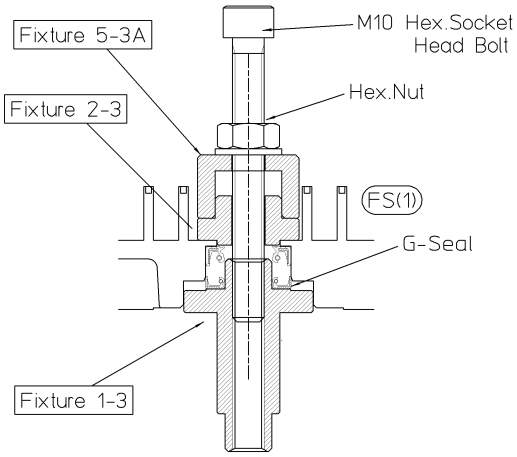

Important	**・Pay attention to directions of Fixture and G-seal.** Side of G-seal where you can see spring faces Shaft Seal (1). **・Check that the top of G-seal is lower than bottom of tapered section of FS(1).** ・If not, tighten further with Fixture again in the same direction 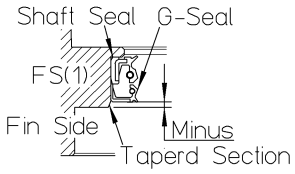 **・Wipe out extruded LOCKTITE with clean cloth.** **Check directions of Fixture and G-seal**

・Fill **ISP exclusive grease [0.1ml(0.2g)]** between 2 lips of Shaft Seal(1) and G-seal with syringe evenly around whole periphery.

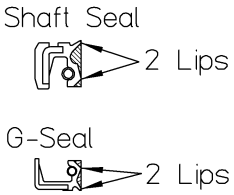

5.3.6 Fit Bearing set(1)

・Wipe out dust and grease attached to Bearing set(1).

・Turn Inner ring by hand and check that it turns lightly and smoothly.

・If you feel some rumble, replace the Bearing according to 6.2.

・Fit **3 holes of Bearing set(1) to screw holes on FS(1) side, and tighten by Hex. socket head bolt with slight amount of LOCKTITE 242 or 542.**

Tightening torque 2±0.3 N·m (20±3kgf·cm)

Important	**・Use LOCKTITE 242 or 542 (medium strength).** **・Apply slight amount of LOCKTITE to the thread section.** **・Wipe out extruded LOCKTITE with clean cloth.**

5.3.7 Fit Tip Seal

- Place white soft back-up part facing downwards and black hard sliding material facing upwards.
- Fit Tip Seal from the center of FS(1).
- Internally extruded section near the center of wrap functions as a stopper to hold Tip Seal. Completely push sliding material side by hand into the groove.

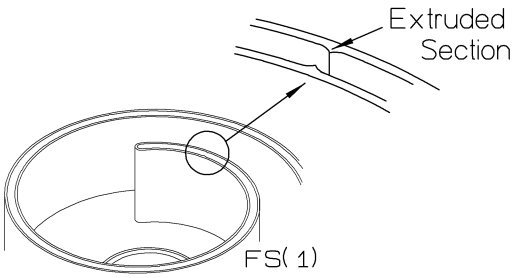

5.4 Maintenance of FS(2)

5.4.1 Remove G-seal

Remove the G-seal as follows and replace it with new one.

- Insert straight edge screwdriver to G-seal from the Fin side of FS(2) and remove it.

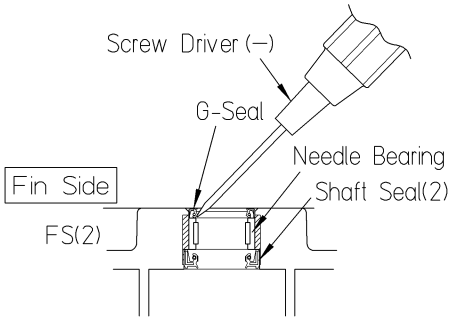

Important	**・Pay attention not to damage Flange surface of FS(2),scroll section, and Needle Bearing section .**

5.4.2 Remove Shaft Seal(2)

Remove the Shaft Seal (2) as follows and replace it with new one.

- Insert straight edge screwdriver from the Fin side of FS (2) to Shaft Seal(2), lightly tap handle of screwdriver and remove Shaft Seal(2) while moving the screwdriver around the whole periphery Shaft Seal(2).

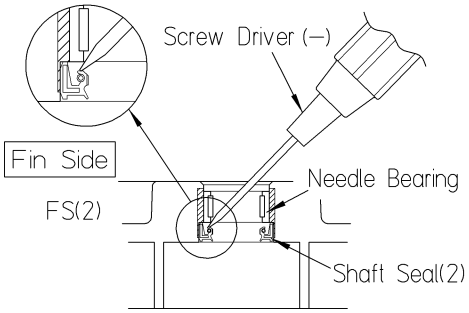

Important	**・Pay attention not to damage Flange surface of FS(2), scroll section and Needle Bearing section.**

5.4.3 Clean FS(2)

①Wipe out dust on the place where Shaft Seal(2) of FS(2) and G-seal enter, with clean cloth.

- Wipe out dust on wall and bottom of scroll wrap with clean cloth.
- Wipe out dust attached to side and bottom of Tip Seal groove by using bamboo spatula covered with clean cloth so as not to damage the groove.
- Blow out the whole unit with air.

②Fully wipe out old grease attached to Needle Bearing in the center of FS(2) with clean cloth while turning roller until no more comes out.

Important	**・If you feel some resistance to remove Tip Seal, be sure to wipe out dust.** **・Be sure to clean Tip Seal groove with soft bamboo spatula since it is fragile.** **・Always use clean cloth.** Mixing with other grease can greatly deteriorate the performance. **・Pay attention not to leave the waste thread in Bearings.**

5.4.4 Fit Shaft Seal (2)

① Apply slight amount of **LOCKTITE 242 or 542 around outer periphery of new Shaft Seal (2).**

②Insert **Fixture 7-3** to **Fixture 4-3** and insert them to FS(2) from the Fin side.

③Horizontally insert Shaft Seal(2) to **Fixture 4-3**.

・Fit **Fixtures 6-3 and 6-4**,**5-3A** in this order to Shaft Seal(2) from the scroll side. Screw **M10** Hex. socket head bolt along with Hex. nut and Washer from the scroll side.

④Turn Hex. nut and fit Shaft Seal(2).

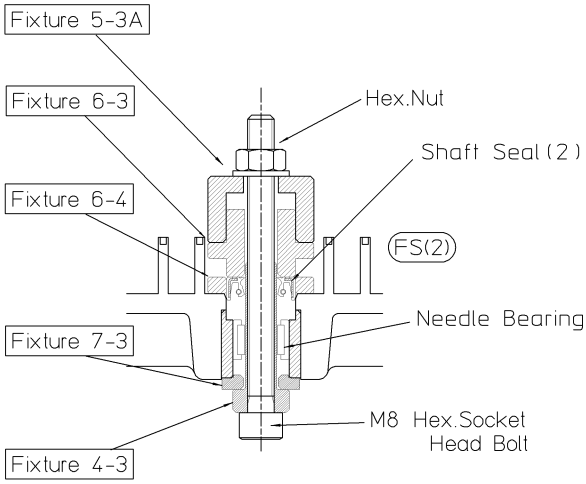

Important

- **Pay attention to directions of Fixture and Shaft Seal(2).**
  Side of Shaft Seal(2) where you can see spring faces Needle Bearing.
- **Horizontally place Shaft Seal(2) on the Fixture.**
- **Check that Shaft Seal(2) is lower than the surface of FS(2) scroll side.**
  If not, tightly further again with Fixture in the same direction. Otherwise, Shaft seal(2) can contact OS.

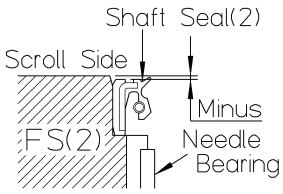

Check directions of Fixture and Shaft seal(2)

5.4.5 Fit G-seal

①Insert **Fixture 7-3** and new G-seal to **Fixture 4-3**.

②Insert **Fixture 6-4** and **6-3**, **5-3A** in this order to FS(2) from scroll side.

③Insert G-seal and **Fixture 4-3** with **Fixture 7-3** to FS(2) from the Fin side, and screw **M8** Hex. socket head bolt along with Hex. nut and Washer from the opposite side.

④Turn Hex. nut and fit G-seal.

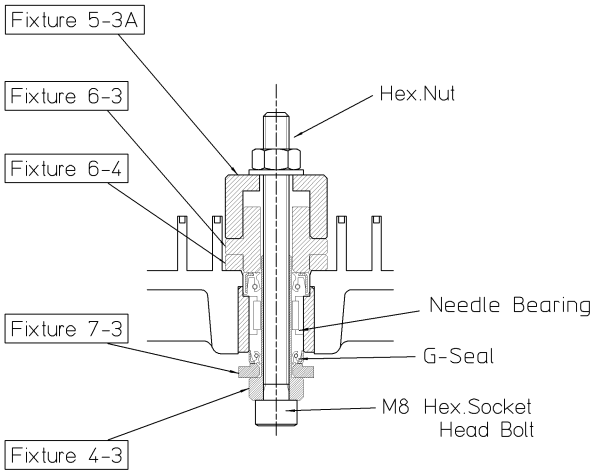

Important

- **Pay attention to directions of Fixtures and G-seal.**
  Side of G-seal where you can see spring faces Bearing.
- **Check that G-seal is lower than FS(2) Fin side and that is parallel to Fin surface (not curved).**

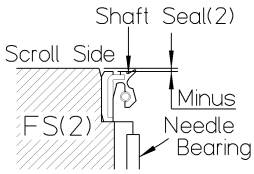

If not, tighten further again with Fixture in the same direction.

Check directions of Fixture and G-seal

5.4.6 Grease Needle Bearing and Shaft Seal, G-seal

- Fill **ISP exclusive grease** to roller section of Needle Bearing.
- Apply **ISP exclusive grease** between roller and cage while turning roller.

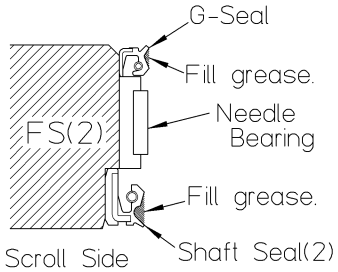

Grease volume [／1 pc.]	ISP-90
	0.1 ml (0.2 g)

- Evenly fill **ISP exclusive grease [0.1ml (0.2g)]** between 2 lips of Shaft Seal (2), and also between 2 lips of G-seal.

Important

- **Be sure to use ISP exclusive grease.**
- **Be sure to use clean rubber gloves when applying grease to Needle Bearing.**
- **Apply grease a bit more to both roller and cages which are somewhat worn, different from new Bearing.**

Use ISP exclusive grease

5.4.7 Fit Tip Seal

- Place white soft back-up part facing downwards and black hard sliding material facing upwards.
- Fit Tip Seal from the center of FS(2).
- Internally extruded section near the center of wrap functions as a stopper to hold Tip Seal. Completely push sliding material side with hand into the groove.

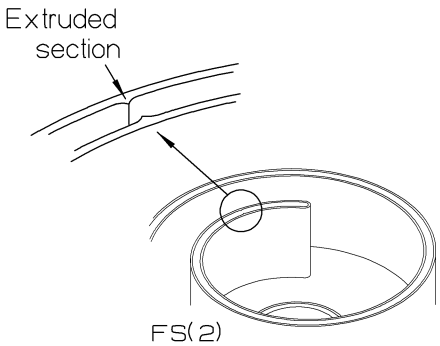

5.5 Maintenance of OS

5.5.1 Remove G-seal

Remove G-seal as follows and replace it with new one.

・Place OS on horizontal stand with rubber.
・Place batten on OS and remove G-seal with straight edge screwdriver.
・Remove G-seal on the opposite side in the same way.

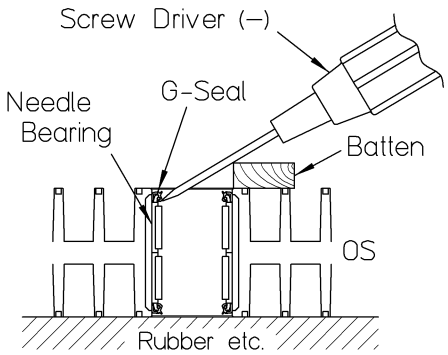

Important	**・Pay attention not to damage scroll top, bottom and side surfaces of OS**

5.5.2 Clean OS

①Wipe out dust in the place where G-seals enter OS with clean cloth.
・Wipe out dust on wall and bottom of scroll wrap with clean cloth.
・Wipe out dust attached to side and bottom of Tip Seal groove by using bamboo spatula covered with clean cloth so as not to damage the groove.
・Blow out the whole unit with air.
②Fully wipe out old grease attached to Needle Bearings and Sleeve in the center of OS with clean cloth while turning roller until no more comes out.

Important	**・If you feel some resistance to remove Tip Seal, be sure to wipe out dust.** **・Be sure to clean Tip Seal groove by soft bamboo spatula since it is fragile .** **・Always use clean cloth.** Mixing with the other grease can greatly deteriorate the performance. **・Pay attention not to leave the waste thread in Bearings.**

③Remove screws of Needle Bearing (Pin Crank) around OS with cross head screwdriver.
④Push Needle Bearing from the opposite side and remove them.
⑤Fully wipe out old grease attached to Needle Bearing with clean cloth while turning roller until no more comes out.
・If you replace Pin Crank set in 5.3.3, replace Needle Bearings also.

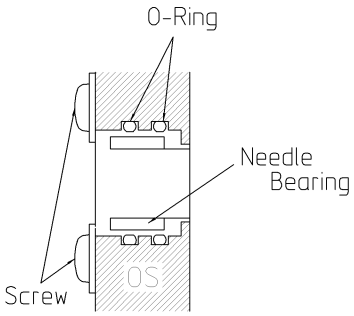

Important	**・Pay attention not to damage cross section of screw to fix Needle Bearing.** Use small cross head screwdriver (for M3).

5.5.3 Fit G-seal

① Insert **Fixture 14-3** and new G-seal to **Fixture 13-3**, and then to OS. Insert **Fixture 10-3** from the opposite side.

②Insert **Fixtures 12-3** to **Fixture 10-3**, screw **M10** Hex. socket head bolt along with Hex. nut and Washer, and turn Hex. nut and fit G-seal.

③Every fill ISP exclusive grease [0.1ml(0.2g)] between 2 lips of G-seal.

④Fit G-seal on the opposite side in the same way.

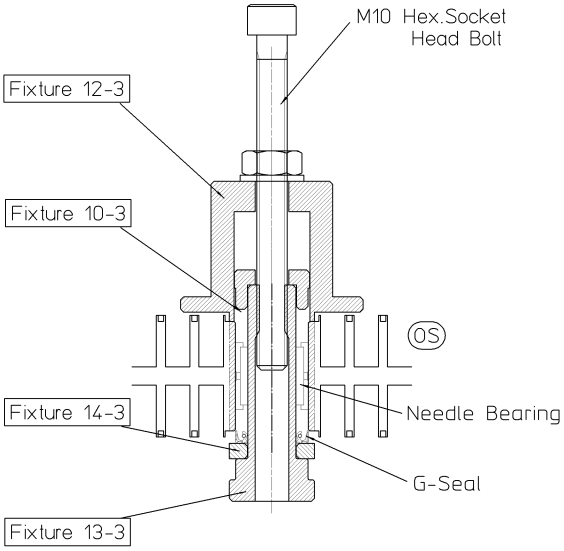

Important	・**Pay attention to directions of Fixtures and G-seals.** Side of G-seal where you can see spring faces Bearing. ・**Check that G-seal is lower than OS surface.** If not, tighten further again with fixture in the same direction. 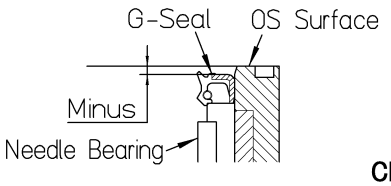 **Check Fixture direction**

5.5.4 Grease Needle Bearing of Pin Crank

・Fill **ISP exclusive grease** to roller section of Needle Bearing (Pin Crank) which was removed from OS.
・Apply **ISP exclusive grease** between roller and cage while turning roller.

Grease volume [／1 pc.]	**ISP-90**
	0.15 ml (0.3 g)

Important	・**Be sure to use ISP exclusive grease.** ・**Be sure to use clean rubber gloves when filling grease to Needle Bearing.** Apply grease a bit more to both roller and cages which are somewhat worn, different from new Bearing. **Use ISP exclusive grease**

5.5.5 Fit Needle Bearing of Pin Crank

- Insert straight (not askew) Needle Bearing (Pin Crank) in this order into holes on the outer periphery of OS
- Apply slight amount of **LOCKTITE 242 or 542 to screws and tighten them**.

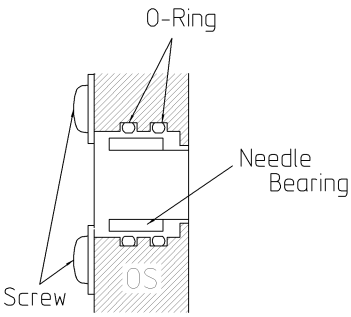

5.5.6 Grease OS Needle Bearing

①Fill **ISP exclusive grease** to roller of Needle Bearing in the center of OS.

- Apply **ISP exclusive grease** between roller and cage while turning roller.

Grease volume [／ 1 pc.]	ISP-90
	0.8 ml (1.6 g)

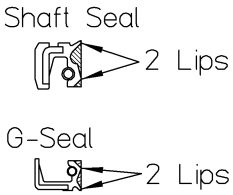

②Fill **ISP exclusive grease [0.2 ml (0.4 g)]** between G-seal and Needle Bearing with syringe to evenly around whole periphery.

Important	**・Be sure to use ISP exclusive grease.** **・Be sure to use clean rubber gloves when applying grease to Needle Bearing.** Apply grease a bit more to both roller and cages which are somewhat worn, different from new Bearing.	**Use ISP exclusive grease**

5.5.7 Fit Tip Seal

- Place white soft back-up part facing downwards and black hard sliding material facing upwards.
- Fit Tip Seal in accordance with shape at the center of OS and insert gradually further towards outside.

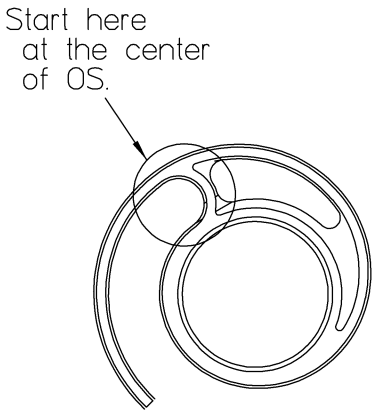

５.６　Replace Exhaust valve

① Loosen Nut and remove Exhaust Flange. Remove O ring in the Outlet hole of FS(2), and clean in the hole and Outlet Flange by using cloth and brass brush.
② Remove C snap ring in the Outlet Flange with stop ring supplier. Remove Exhaust Guide. Exhaust Spring and Exhaust Valve with tweezers.
③ Clean Outlet Flange and sealing surface where Outlet hole and Exhaust Valve contact by using clean cloth and brass brush so as not to damage, and blow out with air.
④ Fit new O ring to the groove of Exhaust Valve ,hole for O ring and new Exhaust Valve,Exhaust Spring and Exhaust Guide to Outlet Flange and attach with C snap ring.
⑤ Fit Outlet Flange with Nut to FS(2),and tighten Nut and fix it.

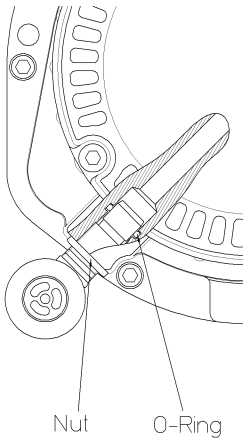

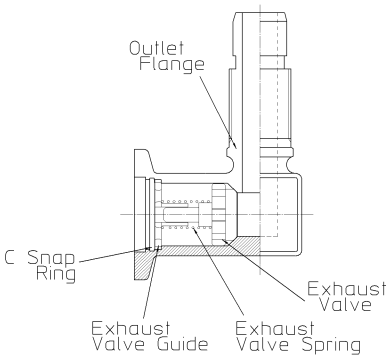

Important	・Exhaust valve should be at the center. ・Use LOCKTITE 242 or 542（medium strength）. ・Apply slight amount of LOCKTITE to only thread section. ・Wipe out extruded LOCKTITE with clean cloth.

５.７　Maintenance of Inlet Flange

① Remove Inlet Flange by spanner.
② Clean inside the Inlet Flagne and Inlet Filter with clean cloth ,and blow out dusts.
③ Put a new O ring in the groove of Inlet Flange.
④ Put the Inlet Flange on the FS(1) by spanner.

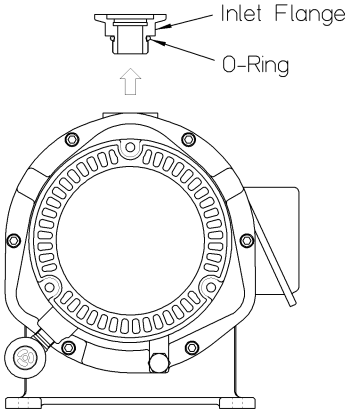

５.８ Maintenance of Air Flush Port

① Remove the Air flush Kit from Air flush port.
② Replace the Air flush kit with new one. Apply slight amount of LOCKTITE 242or 542 to the thread section of the Hex.socket head bolt, and fit them to FS(1).

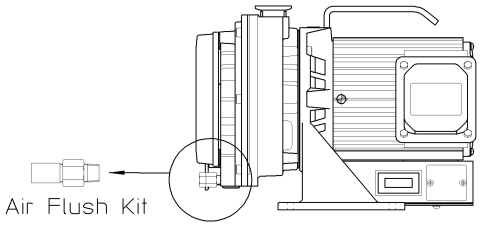

Important	・Evenly insert Pipe so that Pipe fully contact to the bottom of Elbow. ・Do not tighten Cap nut too hard.

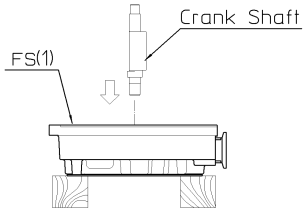

5.9 Assembly

Assemble in reverse order of disassembly.

5.9.1 Assemble Body set

①Place 2 blocks (wood which height is over 55mm) on horizontal workbench and FS(1) on the top of them.

・Fit Crank Shaft vertically to FS(1).

Important	**When fitting Crank Shaft to FS(1), pay attention not to damage Bearing and Shaft Seal with the angle of Key groove of Crank Shaft.**

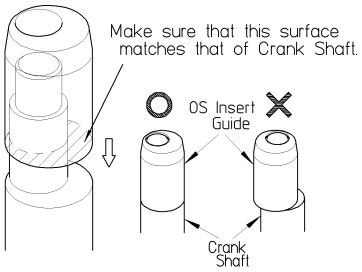

②Turn eccentric section of both Crank Shaft and Pin Crank in the same direction. Put the **OS Insert Guide (Black one for ISP-250B, White one for ISP-500B)** on the Crank Shaft as shown in the right drawing. Fit OS to FS(1).

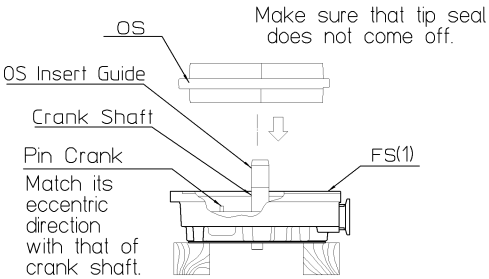

Important	**Pay attention that Tip Seal does not come off when fitting OS.**

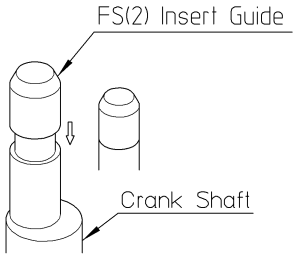

③Put the **FS(2) Insert Guide** on the Crank Shaft. Fit new O ring to FS(2), fit it to FS(1) and tighten the Hex. socket head bolts.

Tightening torque	
ISP-90	**10±0.7 N·m (100±7kgf·cm)**

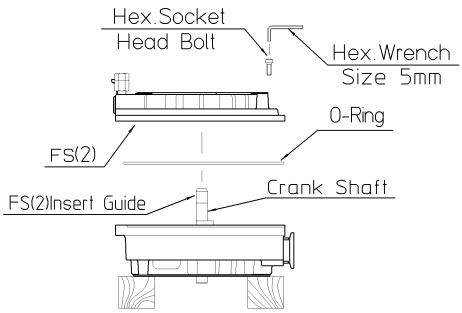

Important	・Check that there is no dust or damage on the surface of O ring for FS(1), FS(2) and O ring surface. ・Apply slight amount of ISP exclusive grease to the O ring surface. ・Check that O ring does not come off from mating side and Tip Seal does not come off from the groove. ・Diagonally tighten Hex. socket head bolts fixing FS(2) by turns in order to tighten evenly.

④Fit Parallel Key and Fan(2) to FS(2), apply slight amount of **LOCKTITE 242 or 542 to Hex. socket head bolts** and fully tighten along with Washer2.

Tightening torque 3±0.3 N·m(30±3kgf·cm)

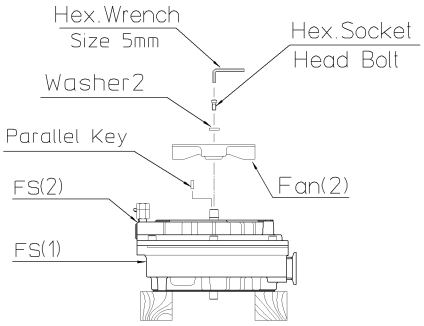

⑤Stand Body set vertically, fit Parallel Key and Fan(1). Apply slight amount of **LOCKTITE 242 or 542 to Hex. socket head bolts** and fully tighten along with Washer1.

Tightening torque 3±0.3 N·m(30±3kgf·cm)

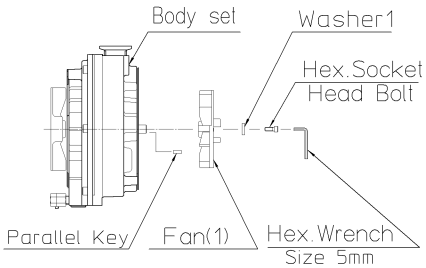

Important	・Turn Fan(2) by hand and check that it turns smoothly (a little bit heavier than rotating resistance checked in Disassembly 5.1.1.) If rotation is heavy, disassemble again and check that Tip Seal does not come off. **・Use LOCKTITE 242 or 542 (medium strength).** **・Apply slight amount of LOCKTITE to only thread section.** **・Wipe out extruded LOCKTITE with clean cloth.**

5.9.2 Fit Body set

①Stand Motor set and Body set vertically and fit new Spider to Coupling, with central dent on Motor side.

②Match nail of Fan with nail of Spider, Parallel Pin with hole position, and fit Body to Motor set.

・Check that Fan(2) turns smoothly and tighten Hex. socket head bolts.

Tightening torque 15±0.7 N·m(150±7kgf·cm)

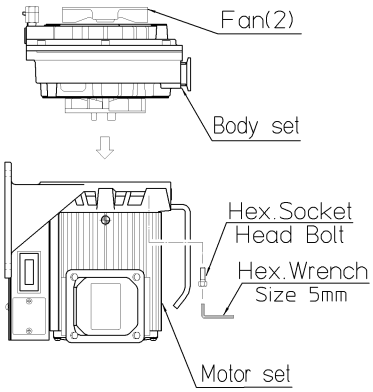

Important	Fit pump to Motor set so that Inlet can face the same direction as before maintenance.	 Check inlet direction

5.9.3 Fit Fan Cover

・ Apply slight amount of **LOCKTITE 242 or 542 to the thread section of Hex. Socket head bolts**.

・Tighten Fan Cover and Cover Plate(2) together with the bolts.

5.10 Operation

・Operate pump for 2～3 hours and check that current is within rated one (refer to 6.11) and that there is no abnormal sound and vibration. Also inspect the pump performance (refer to 6.10).

When you have replaced Tip Seal, be sure to do **break-in operation** (refer to 6.9).

6. Every two years or every 16000 hours maintenance

6.1 Disassembly

Disassemble in the same way as 5.1.

6.2 Maintenance of FS (1)

Regarding G-seal and Shaft Seal, do in the same way as 5.3.2, 5.3.4, and 5.3.5.

6.2.1 Remove Bearing set (1)

①Remove Tip Seal from outer periphery.
②Remove Bearing set (1) in the same way as 5.3.

6.2.2 Remove Ball Bearing

①Fit **Fixture 17-3** (pay attention to direction) to Bearing from Flange side of Bearing case side.
②Fit **Fixtures 9-3 and 5-3B** to Bearing case from the opposite side and screw **M10** Hex. socket head bolts along with Hex. nut and Washer.
③Turn Hex. nut and remove Ball Bearing.

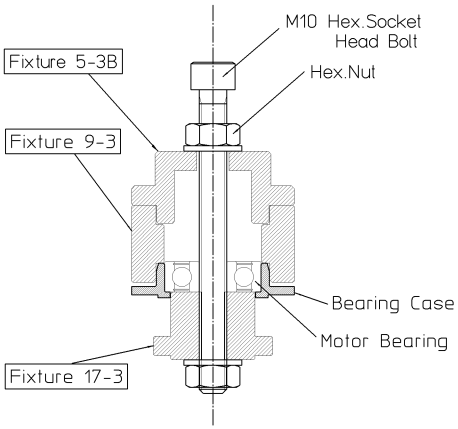

6.2.3 Clean FS(1)

Clean FS(1) in the same way as 5.3.3

6.2.4 Fit Ball Bearing

①Fit **Fixture 17-3** to Bearing case from Flange side (pay attention to direction).
② Fit **Fixture 9-3** to Bearing case from the opposite side and insert new Bearing horizontally.
③Fit **Fixture 18-3** (pay attention to direction) to Bearing and screw **M10** Hex. socket head bolt along with Hex. nut and Washer from **Fixture 18-3** side.
④Turn Hex. nut and fit Bearing.

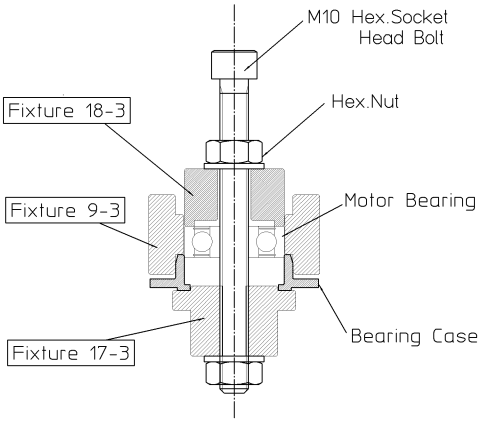

6.2.5 Fit Bearing set (1)

・Match and fit **3 holes of Bearing set (1) with thread holes on FS (1) side, and tighten by Hex. socket head bolts with slight amount of LOCKTITE 242 or 542**.

Tightening torque 2±0.3N·m(20±3kgf·cm)

Important	**・Use LOCKTITE 242or 542 (medium strength).** **・Apply slight amount of LOCKTITE to thread section.** **・Wipe out extruded LOCKTITE with clean cloth.**

6.2.6 Fit Tip Seal

・Fit Tip Seal in the same way as 6.8.

6.3 Maintenance of FS (2)

6.3.1 Remove G-seal and Shaft Seal (2)

①Remove Tip Seal from outer periphery.
②Remove G-seal and Shaft Seal (2) in the same way as 5.4.1 and 5.4.2.

6.3.2 Remove FS (2) Needle Bearing

①Insert **Fixture 4-3** to FS(2) from. Fin side.

②Fit **Fixtures 3-3 and 5-3A** to FS(2) from scroll side, and screw **M8** Hex. socket head bolts along with Hex. nut and Washer.

③Turn Hex. nut and remove Needle Bearing.

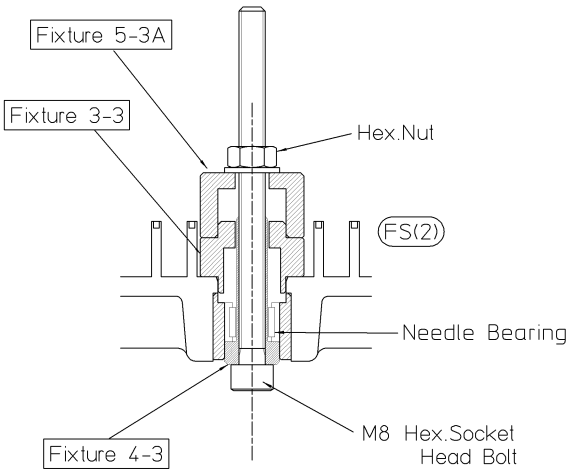

6.3.3 Clean FS(2)

・Clean FS(2) in the same way as 5.4.3 ①.

6.3.4 Fit FS(2) Needle Bearing

①Insert new Needle Bearing to **Fixture 4-3**.

②Insert **Fixture 6-3** to **Fixture 5-3A** and fit them to FS(2) from scroll side .

③Insert **Fixture 4-3** with Needle Bearing to FS(2) from Fin side and screw **M8** Hex. socket head bolt along with Hex. nut and Washer.

④Turn Hex. nut and fit Needle Bearing.

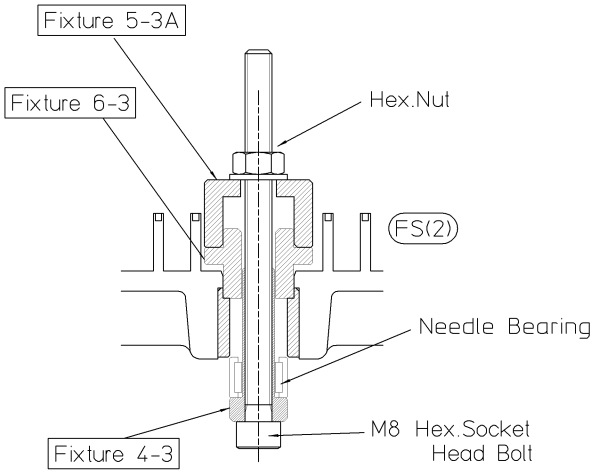

Important	**・Pay attention to Fixture direction.** **・Check that edge surface (scroll side) of Needle bearing and stepped section on FS (2) side are on the same level.** If not, fully tighten with Fixture in the same direction. **・Wipe out dust on Fixture with clean cloth.** 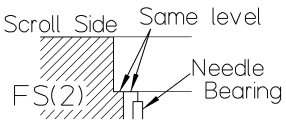	**Check Fixture direction**

6.3.5 Fit G-seal and Shaft Seal

①Do in the same way as 5.4.4 and 5.4.5.
②Evenly fill **ISP exclusive grease [0.1ml(0.2 g)]** between 2 lips of Shaft Seal and between 2 lips of G-seal around the whole periphery with syringe.

Important	**・Be sure to use ISP exclusive grease.**	**Use ISP exclusive grease**

6.3.6 Fit Tip Seal

・Fit new Tip Seal in the same way as 6.8.

6.4 Maintenance of OS

6.4.1 Remove G-seal and Needle Bearing

①Remove 2 Tip Seals attached to the both sides of OS from the end of outer periphery.

②Remove G-seal in the same way as 5.5.1.

③Insert **Fixture 8-3** to Needle Bearing of OS.

④Fit **Fixtures 10-3 and 12-3** in this order from the opposite side and screw **M10** Hex. socket head bolts with Hex. nut and Washer.

⑤Turn Hex. nut and remove Needle Bearing (a set of 2 bearings.)

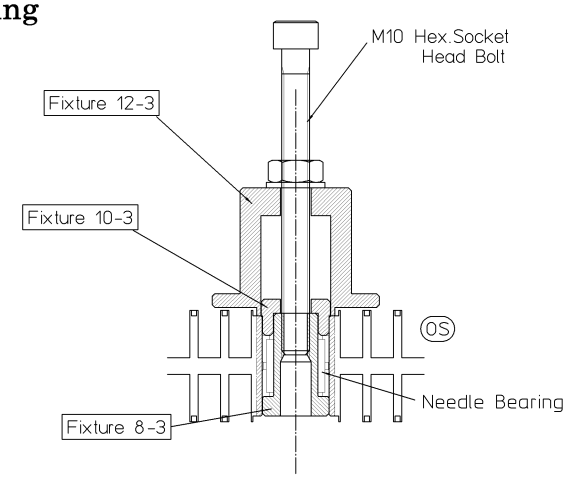

Important

- **Pay attention to Fixture direction.**
- Pay attention not to damage top, bottom and side of scroll of OS.

Check Fixture direction

6.4.2 Clean OS

- Wipe out dust and old grease in inner dia. of OS center.
- Wipe out dust on wall and bottom of wrap of scroll with clean cloth.
- Wipe out dust attached to side and bottom of Tip Seal groove by using bamboo spatula covered with clean cloth so as not to damage the groove.
- Blow out the whole unit with air.

Important

- **If you feel some resistance when removing Tip Seal, be sure to wipe out dust.**
- **Be sure to clean Tip Seal groove by soft bamboo spatula since it is fragile.**
- **Always use clean cloth.**
  Mixing with other grease can greatly deteriorate the performance.
- **Pay attention not to leave the waste thread in Bearings.**

6.4.3 Replace Needle Bearing for Pin Crank

①Remove screws of Needle Bearing (Pin Crank) around OS with cross head screwdriver.
②Push and remove Needle Bearing from the opposite side.
③Remove the 2 O rings in the hole for Needle Bearing.
④Insert 2 new O rings in each hole.
⑤Insert straight new Needle bearing (Pin Crank) to hole of outer periphery of OS.
⑥Tighten by **screws with slight amount of LOCKTITE 242 or 542**.

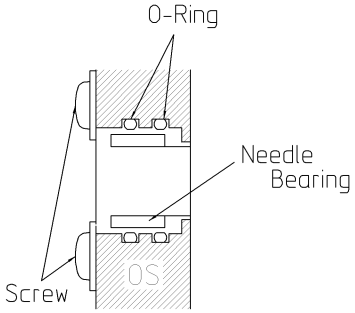

Important

- **Pay attention not to damage crossed section of screw for fixing Pin Crank.**
  Use small cross head screwdriver (for M3).
  Wipe out extruded LOKTITE with clean cloth.

6.4.4 Fit Needle Bearing

①Insert new Needle Bearing to **Fixture 13-3** and fit to one side of OS. Fit **Fixture 10-3** from the opposite side.
②Insert **Fixtures 12-3** to **Fixture 10-3**, and screw **M10** Hex. socket head bolts with Hex. nut and Washer.
③Turn Hex. nut and fit Needle Bearing.

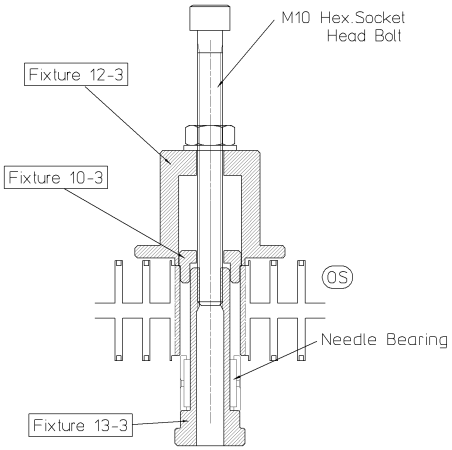

Important

- **Pay attention to direction of Fixtures.**
- **Pay attention not to damage top, bottom and side of scroll of OS.**
- **Wipe out dust on Fixtures with clean cloth.**

Check Fixtures direction

6.4.5 Fit G-seal

・Fit G-seal in the same way as 5.5.3.
・Evenly fill **ISP exclusive grease [0.2ml(0.4 g)]** between 2 lips of G-seal around periphery with syringe.

Important	**・Be sure to use ISP exclusive grease.**  Use ISP exclusive grease

6.4.6 Fit Tip Seal

・Fit new Tip Seal in the same way as 6.8.

6.5 Replace Exhaust Valve

・Do in the same way as 5.6.

6.6 Maintenance of Inlet Flange

・Do in the same way as 5.7.

6.7 Maintenance of Air Flush Port

・Do in the same way as 5.8.

Important	**・Use LOCKTITE 242 or 542 (medium strength).** **・Apply slight amount of LOCKTITE to thread section.** **・Wipe out extruded LOCKTITE with clean cloth.**

6.8 Replace Tip Seal

6.8.1 Fit new Tip Seal

①Place white soft back-up part facing downwards and black hard sliding material side facing upwards and push it into the groove by hand so that protruded portion of black sliding material is minimal.
②First insert Tip Seal in accordance with the shape at the center on FS(2) side of OS and insert gradually further towards outside.
③Cut Tip Seal at 2~3mm before the end of Tip Seal groove by cutter (sharp knife).
④Insert remaining Tip Seal at the center of the groove from FS(1) side and cut at 2~3mm before the end of the groove by cutter (sharp knife).
⑤Internally extruded section at the center of wrap functions as a stopper to hold Tip Seal. Completely push sliding material by hand into the groove.
⑥In the same way, insert Tip Seal to FS(1) side of OS, and fit remaining Tip Seal to FS(2) side.

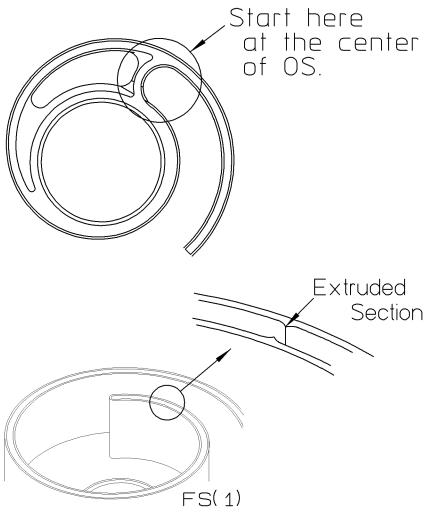

Important	**・Check that Tip Seal extrudes by about 0.2mm.** **・Fit Tip Seal to the groove properly, not too tightly or too loose.** Too loose insertion can cause Tip Seal to come off since it extrudes too much from the groove. 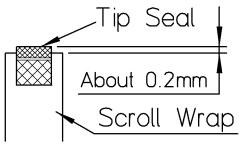  Check extrusion of Tip seal

6.8.2 Replace O ring

Replace Inlet O ring, O ring in the Exhaust Flange, O ring in Needle Bearings for Pin Crank and FS(2) O ring as follows:

①Remove old O ring and wipe out dust at O ring groove with clean cloth.

②Wipe out dust on sealed surface of O ring with clean cloth.

③Apply slight amount of **ISP exclusive grease** to new O ring .

Important	**・Be sure to use ISP exclusive grease.** **・Pay attention not to apply too much grease.** Too much grease can attract dust. Wipe out excessive grease with clean cloth. **・Pay attention not to damage O ring groove and sealed O ring surface.** **・Pay attention not to leave any thread of cloth in O ring surface and O ring groove.**	**Use ISP exclusive grease**

6.7.3 Assembly

・Do in the same way as 5. 9 .

6.9 Break-in operation

⚠ WARNING	**Be sure to install ground leakage breaker when connecting pump to electric source.**	**Install ground leakage breaker**

Important	**・When you have replaced Tip Seal, do break-in operation so as to smooth Tip Seal surface.** **・Be sure to take off Exhaust Valve during break-in operation.** **・During break-in, open Inlet Valve 2~3 times hourly so as to emit worn powder.** **・This pump is common for 50Hz/60Hz. Do break-in for both 50Hz and 60Hz.** When electric source is either 50Hz or 60Hz, do break-in at the same electric source as pump installation site.

①Do break-in of Tip Seal in the following way while removing Exhaust Valve.

②Close Inlet Valve and operate at 50Hz.

③Loosen Hex. socket head bolts which fix FS(1) and FS(2), and tighten with hand till it stops.

④If current during pump operation is within + 10% from rated figure (refer to [rated current chart] on next page), continue operation as it is. If it exceeds + 10% from rated figure, open Inlet to atmosphere and operate for a while, then close Inlet again and check current. Repeat this procedure till current is less than 10% from rated figure.

⑤If current is less than the rated figure, tighten Hex. socket head bolts and do 24 hours continuous operation.

Tightening torque **ISP-90 10±0.7N·m(100±7kgf·cm)**

⑥Change electric source to 60Hz and do ②～⑤.

⑦Stop pump and turn off electric source.

⑧Proceed with 5.1.1, 5.1.3, and 5.1.4 (②③ only), wipe out dust in pump with clean cloth and blow out with air.

⑨Wipe out dust at Exhaust Valve hole with clean cloth in the same way as 5.6, blow out with air and fit Exhaust Valve.

⑩Apply **ISP exclusive grease** to roller at OS Needle Bearings, Needle Bearings for Pin Crank and FS(2) Needle Bearings.

・Apply **ISP exclusive grease** between roller and cage while turning roller.

Grease volume [／bearing]	where to apply	ISP-90
	OS Needle bearing	0.2ml(0.4 g)
	Needle bearing at Pin crank	0.05ml(0.1 g)
	FS(2) Needle bearing	0.1ml(0.2 g)

⑪Evenly fill **ISP exclusive grease [0.1ml(0.2g)]** between OS G-seal and Needle Bearings; FS(2) G-seal and Needle Bearings; and between 2 lips of FS(2) Shaft Seal(2) and G-seals of OS around the whole periphery with syringe.

Important	・**Be sure to use ISP exclusive grease.**  Use ISP exclusive grease

⑫Assemble in reverse order of disassembling.

6．10 Inspect pump performance

①Operate pump and measure currents.

model	Specification	current after break-in (when Inlet is closed)
ISP−90	**I-phase** 200V	0．9～1．2A

②Check that there is no abnormal noise and vibration.

③Inspect the ultimate pressure and leak tightness.

Ultimate pressure: ≦ 5 Pa

Leak tightness: 1.0×10^{-2} Pa・L/s

6．11 Rated current chart

ISP−90 Single-phase

Voltage V	100		115	200		230	
Hertz Hz	50	60	60	50	60	50	60
Rated current A	2.6	2.1	2.2	1.3	1.1	1.6	1.1
Rated current+10% A	2.9	2.3	2.4	1.4	1.2	1.8	1.2

Fixture combination chart

Model : OCX-867

Model ISP-90

	Tool No.	1-3	2-3	3-3	4-3	5-3A	5-3B	6-3	6-4	7-3	8-3	9-3	10-3	12-3	13-3	14-3	15-3	17-3	18-3
FS (1)	1. Remove Shaft Seal	○					○												
	2. Fit Shaft Seal	○	○			○											○		
	3. Fit G-seal	○	○			○													
FS (2)	4. Fit G-seal				○	○		○	○	○									
	5. Fit Shaft Seal				○	○		○	○	○									
OS	6. Fit G-seal												○	○	○	○			
FS (2)	7. Remove Needle Bearing			○	○	○													
	8. Fit Needle Bearing				○	○		○											
OS	9. Remove Needle Bearing										○		○	○					
	10. Fit Needle Bearing												○	○	○				
FS (1)	11. Remove Ball Bearing						○					○						○	
	12. Fit Ball Bearing											○						○	○

8. Parts list and Extended drawing

No.	Parts Name	Quantity	No.	Parts Name	Quantity
４	ＦＳ(1)	1	６１	Bolt	３
５	ＯＳ	1	６２	Bolt	１０
６	ＦＳ(2)	1	６７	Screw	３
７	Cover Plate (2)	1	６５	Bolt	５
１２	Fan Cover	1	７１	Washer	３
１３	Fan (2)	1	107	Exhaust Valve set	1
１４	Parallel Key	２	203	Nut	1
１５	Washer	1	208	Washer(2)	1
１６	Crank Shaft	1	302	Bearing kit	1
２４	Inlet Flange	1	303	Seal set	1
２６	Exhaust Flange	1	304	O ring set	1
２７	Cover Plate (1)	1	305	Pin Crank kit	1
２９	Fan (1)	1	306	Air Flush kit	1
３０	Bearing Case	1			
３４	Motor set	1			
34-2	Hour Meter	1			
４８	Snap ring	1			
５４	Coupling	1			
５８	Inlet Filter	1			

(Consumables)

No.	Parts Name	Quantity	Remarks
(１７)	G-seal [ＦＳ(2)]	1	No.303 supplied by Seal set
(１８)	Needle Bearing [ＦＳ(2)]	1	No.302 supplied by Bearing kit
(１９)	Shaft Seal (2) [ＦＳ(2)]	1	No.303 supplied by Seal set
(２０)	G-seal [ＯＳ]	２	No.303 supplied by Seal set
(２１)	Needle Bearing [ＯＳ]	1 set	No.302 supplied by Bearing set
(２３)	O ring [ＦＳ(2)]	1	No.304 supplied by O ring set
(２５)	O ring [Inlet Flange]	1	No.304 supplied by O ring set
(28-1)	Shaft Seal (1) [ＦＳ(1)]	1	No.303 supplied by Seal set
(28-2)	G-seal [ＦＳ(1)]	1	No.303 supplied by Seal set
(３１)	Ball Bearing [ＦＳ(1)]	1	No.302 supplied by Bearing kit
(３７)	O ring [Pin Crank･Needle Bearing]	4	No.302 supplied by Bearing kit
(３８)	Needle Bearing [Pin Crank]	2	No.302 supplied by Bearing kit
(５３)	Spider	1	No.302 supplied by Bearing kit
(６６)	Screw	4	No.302 supplied by Bearing kit
(６７)	Screw	4	No.305 supplied by Pin Crank kit
(７５)	Seal [Pin Crank･Needle Bearing]	1	No.303 supplied by Seal set
(８２)	Housing	1	No.306 supplied by Air Flush set
(８３)	Filter	1	No.306 supplied by Air Flush set
(８６)	Ball	1	No.306 supplied by Air Flush set
(８７)	Snap ring	1	No.306 supplied by Air Flush set
(101)	Tip Seal set(1)	1	No.301 supplied by Tip Seal set
(103)	Tip Seal set(2)	1	No.301 supplied by Tip Seal set
(104)	Pin Crank set	2	No.305 supplied by Pin Crank kit

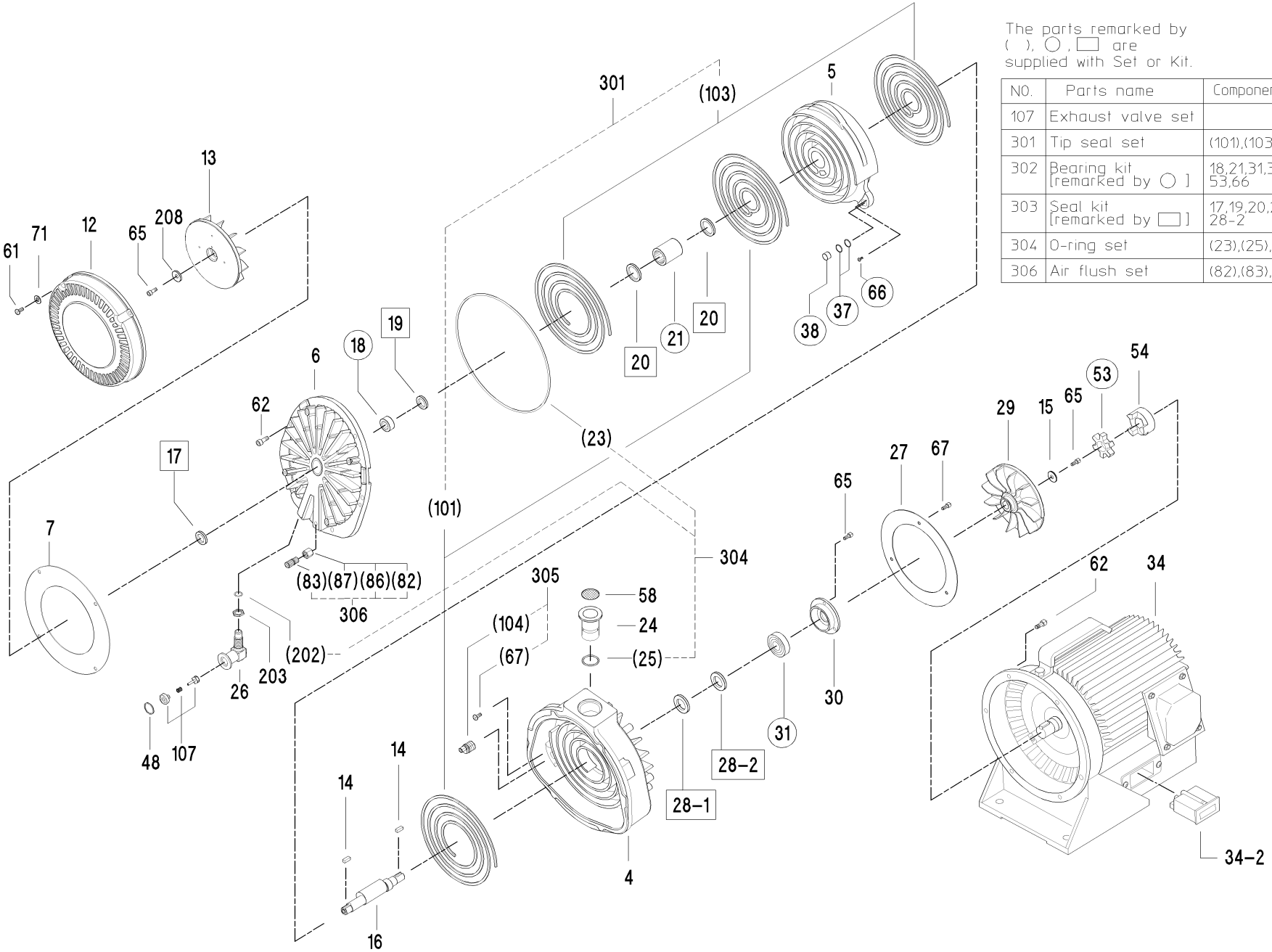

The parts remarked by ( ), ◯ , ▭ are supplied with Set or Kit.

NO.	Parts name	Component parts
107	Exhaust valve set	
301	Tip seal set	(101),(103)
302	Bearing kit [remarked by ◯]	18,21,31,37,38 53,66
303	Seal kit [remarked by ▭]	17,19,20,28-1 28-2
304	O-ring set	(23),(25),(202)
306	Air flush set	(82),(83),(86),(87)

ANEST IWATA Corporation
3176 Shinyoshida-cho, Kohoku-ku, Yokohama 223-8501, Japan

No. 1698-00
Code No. 08807810