ANEST IWATA

Instruction Manual

Maintenance Tools and Fixtures

OCX-128

This instruction manual includes very important warnings, cautions and operating procedure in order to operate this pump safely and efficiently.
Be sure to read this instruction manual thoroughly and fully understand before operation.
After reading it, store it in a convenient place for immediate and future reading.

Important information

Be sure to read this instruction manual to understand how to operate equipment correctly. Only operators, who fully understand warnings, cautions and instructions, are to operate the equipment. Improper operation (mishandling) can cause serious bodily injury, death, fire or explosion.

Store this manual in a convenient place for immediate and future reference.

◆Regarding safety

- The safety instructions given in this manual are the minimum operating requirements. Follow all national or municipal laws and regulations pertaining to fire, electricity, and other safety regulations, as well as corporate regulations.
- Pay special attention to items which are shown by the below marks and symbols.
- Symbols and marks have the following meanings.

Examples of marks

WARNING	Indicates a potentially hazardous situation which, if not avoided, may result in serious injury or loss of life.
CAUTION	Indicates a potentially hazardous situation which, if not avoided, may result in minor or moderate injury or property damage.

Examples of symbols

	Indicates [Beware]. We will explain briefly in or near the symbol. (The example on the left is [Beware of electric shock]).
	Indicates [Prohibited action]. We will explain briefly in or near the symbol. (The example on the left is [Do not touch]).
	Indicates [Required action]. We will explain briefly in or near the symbol. (The example on the left is [Be sure to ground]).

＊We shall not be responsible for any injury or damage caused by disregard of warnings, cautions or instructions.

Supplementary notes

Important	Indicates notes which we ask you to observe. They are helpful to achieve full performance and functionality of the equipment.

For safe operation

Below is very important information about how to safely operate the equipment. Before inspection and maintenance, be sure to read and fully understand the contents.

WARNING

Conduct periodical maintenance and inspection	**Danger of failure and bodily injury** Conduct periodical maintenance and inspection. If not, it can cause insufficient performance, failure of vacuum pump, and bodily injury.
Be careful about high temperature	**Danger of burns** Conduct maintenance and inspection only after vacuum pump becomes cool enough. Maintenance and inspection soon after vacuum pump stops can cause burn injury.
With a thermal protector [Only single-phase motor]	**Danger of restart** Be sure to switch off electric source before maintenance or inspection. Single-phase motor has a thermal protector. Vacuum pump restarts become cool without warning after vacuum pump. .
Turn off electric source	**Danger of electric shock** Be sure to conduct maintenance and inspection after you turn off electric source. If not, it can cause bodily injury from electric shock or turning object.

CAUTION

Never use solvent	**Danger of shorter operating lifetime and failure** Never use solvent when cleaning inside the pump and Tip seal. ※If done, it can shorten lifetime.
Use ISP exclusive grease	**Danger of shorter operating lifetime and Bearing failure** Be sure to use ISP exclusive grease. ※Mixing with other oil can shorten grease life time and damage Bearings.

Contents

1. Before use

1.1 Check the product

- **Check that the package is right-side-up before opening.**
- **Check that the model of the product is the same as the one you ordered.**
- **Check that there is no shortage or damage.**
  If there is any damage, contact either the dealer who sold it to you or us.
- **Check the following accessories.**
  Instruction manual (this one)

1.2 Names of Fixtures and Tools

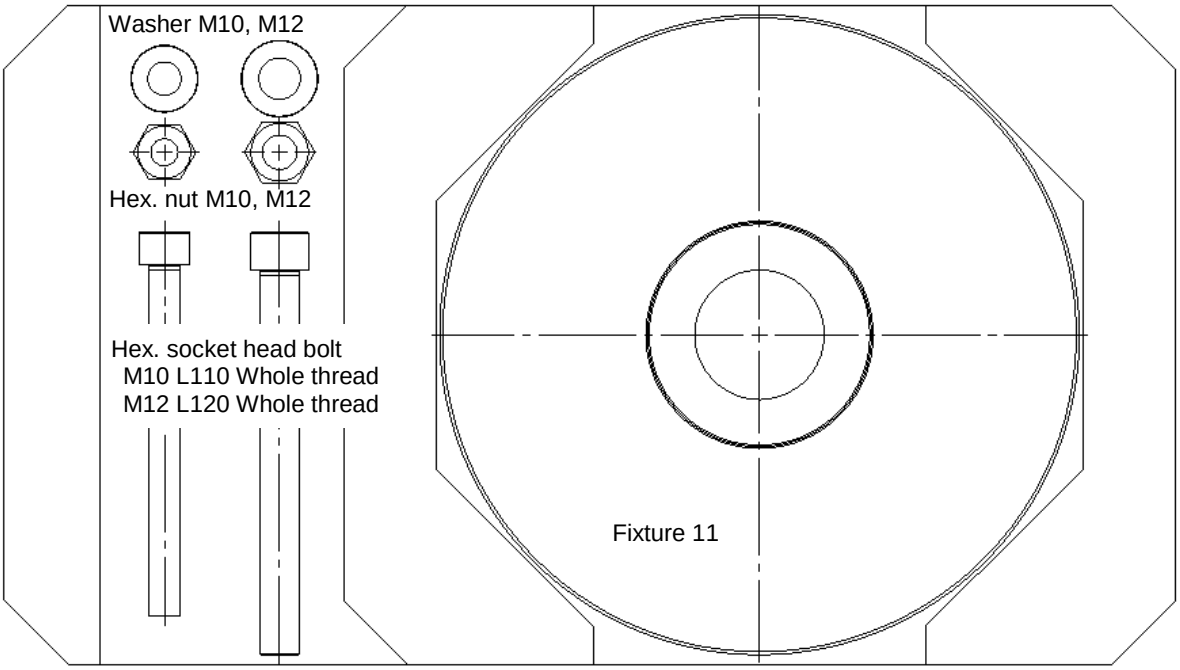

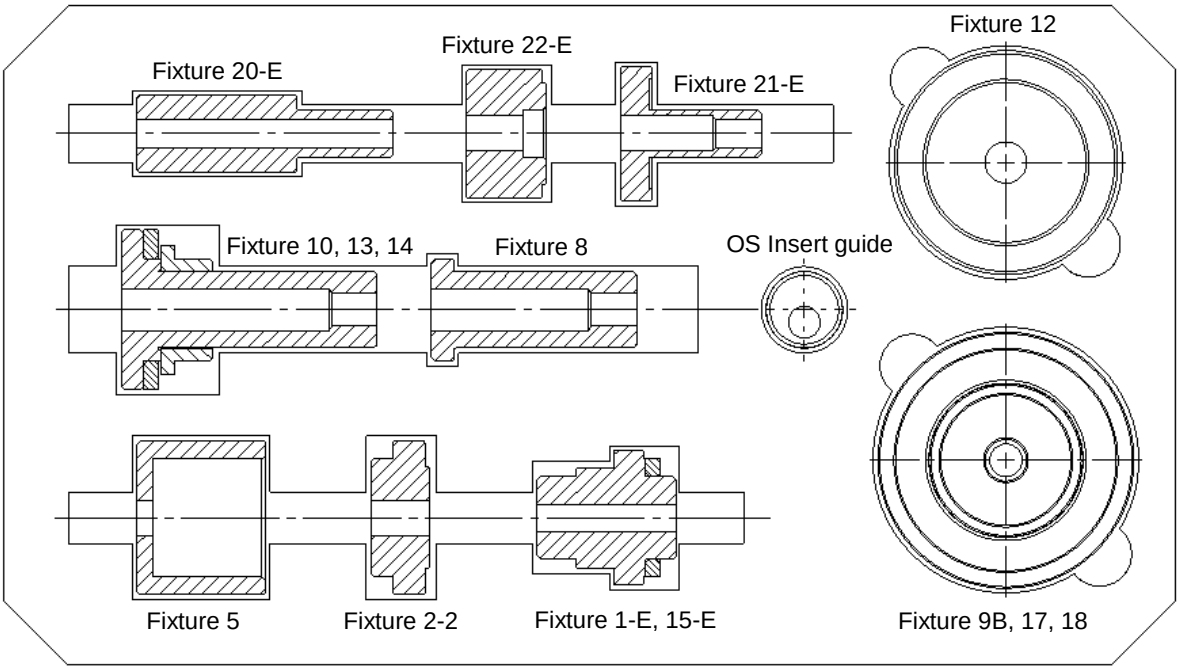

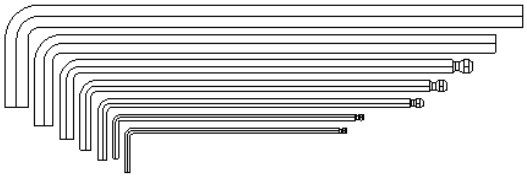

Hex. bar spanner

Wrench flat 10	Long type
Wrench flat 8	Long type
Wrench flat 6	Ball at tip, long type
Wrench flat 5	Ball at tip, long type
Wrench flat 4	Ball at tip, long type
Wrench flat 3	Ball at tip, long type
Wrench flat 2.5	Ball at tip, long type

2. How to use

These are exclusive tools for doing the maintenance and inspection of Oil-Free Scroll Vacuum Pumps, ISP-250E.

⚠ WARNING	
Danger of failure and bodily injury **Conduct periodical maintenance and inspection.** If not, it can cause insufficient performance, failure of vacuum pump, and bodily injury.	**Conduct periodical maintenance and inspection**
Danger of burns **Conduct maintenance and inspection only after vacuum pump becomes cool enough.** Maintenance and inspection soon after vacuum pump stops can cause burn injury.	**Be careful about high temperature**
Danger of restart **Be sure to switch off electric source before maintenance or inspection.** **Single-phase motor has a thermal protector.** Vacuum pump restarts become cool without warning after vacuum pump.	**With a thermal protector [Only single-phase motor]**
Danger of electric shock **Be sure to conduct maintenance and inspection after you turn off electric source.** If not, it can cause bodily injury from electric shock or turning object.	**Turn off electric source**

2.1 Maintenance standards

Do the maintenance according to maintenance standards which are shown in time and period, whichever comes first.
The following parts are consumable and need to be replaced periodically.
Whenever something goes wrong with them, replace them immediately.

Parts No.	Where to inspect	Maintenance standards		Every 400 times vapor pumping	Remarks
		Annually or every 8,000 hours	Biennially or every 16,000 hours		
31	Ball bearing [FS(1)(2)]	△	○	△	Supply with Bearing kit
21	Needle bearing [OS]	Grease / △	○	△	
298	O-ring [FS(2)]	△	○	△	
37	O-ring [Pin crank]	△	○	△	
38	Miniature ball bearing [Pin crank]	△	○	△	
53	Spider	△	○	△	
28-1	Shaft seal [FS(1)(2)]	△	○	△	Supply with Seal set
28-2	G-seal [FS(1)(2)]	△	○	△	
20	G-seal [OS]	△	○	△	
214	O-ring [FS(1)]	△	○	△	Supply with O-ring set
23	O-ring [FS(2)]	△	○	△	
25	O-ring [Inlet flange]	△	○	△	
202	O-ring [Outlet flange]	△	○	△	
297	O-ring [Inner ring]	△	○	△	
295	Inlet gasket [Inlet]	△	○	△	
101	Tip seal set(1)	△	○	△	Supply with Tip seal set
103	Tip seal set(2)	△	○	△	
107	Exhaust valve set	△	○	△	Supply with Exhaust valve set
306	Air flush set	△	○	△	Supply with Air flush kit
104	Pin crank set	△	△	△	Supply with Pin crank kit

○・・・Replace
△・・・Replace if something goes wrong.
Note 1 : Maintenance interval should be shorter than either the period or operating hours.
Note 2 : When you want further maintenance and inspection after either the 6th year or 48,000 operating hours, please contact our dealer who sold it to you.

Important

Causes of failure
Shorten maintenance interval if conditions of installation or operation are unfavorable.
In particular, ambient temperature has a great influence on failure. Maintenance interval is based on an ambient temperature 5~40℃ and a yearly average ambient temperature 25℃.
Shorten the maintenance interval if temperature exceeds the foregoing. If not, it can cause failure.
Maintenance interval is not a guarantee period.

2.2 Necessary items for maintenance

Prepare the following items before maintenance.

1. Block（large） 2pcs.
   (55mm×55mm×length 250mm wood which does not damage pump)

2. Block（small） 1pc.
   (20mm×10mm×length 250mm wood which does not damage pump)

3. Clean cloth

4. Spanners (・14mm wrench flat ・17mm wrench flat ・19mm wrench flat)

5. Thin spanners (・12mm wrench flat)

6. Torque wrench for bolt with Hex. Socket head
   ・for 4mm wrench flat which can measure 3.0N・m (30kgf・cm) torque
   ・for 5mm wrench flat and 6mm wrench which can measure15N・m (150kgf・cm) torque

7. Rubber mat which can prevent sliding

8. Straight edge screwdriver

9. Cross head screwdriver
   ・M3（tip shape No.1）
   ・M4（tip shape No.2）

10. Cutter (Sharp knife)

11. Threadlocker (medium strength) e.g. LOCTITE 242

12. Tweezers（more than 150 mm）

13. Bamboo spatula, Brass brush

14. ISP exclusive grease

15. Snap ring pliers

16. Vernier caliper

17. Ampere meter (Clamp meter)

18. Air compressor etc.

19. Pirani vacuum gauge

20. Leak detector

2.3 Pump structure

This Pump is a scroll type vacuum pump. An orbiting scroll (OS) rotates between a fixed scroll FS(1) and a fixed scroll FS(2) and the set of scrolls compresses air. FS(1) is on Motor side and FS(2) is on Fan cover side.

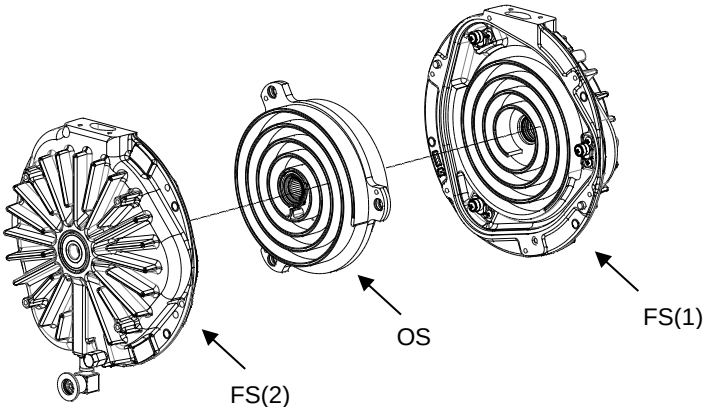

3. Annually or every 8000 hours maintenance and inspection

WARNING	
Danger of failure and bodily injury **Conduct periodical maintenance and inspection.** If not, it can cause insufficient performance, failure of vacuum pump, and bodily injury.	**Conduct periodical maintenance and inspection**
Danger of burns **Conduct maintenance and inspection only after vacuum pump becomes cool enough.** Maintenance and inspection soon after vacuum pump stops can cause burn injury.	**Be careful about high temperature**
Danger of restart **Be sure to switch off electric source before maintenance or inspection.** **Single-phase motor has a thermal protector.** Vacuum pump restarts become cool without warning after vacuum pump.	**With a thermal protector [Only single-phase motor]**
Danger of electric shock **Be sure to conduct maintenance and inspection after you turn off electric source.** If not, it can cause bodily injury from electric shock or turning object.	**Turn off electric source**

3.1 Disassembly

Important

Before disassembly, open Inlet to atmospheric pressure, repeat close-open operation for a couple of times in order to clean inside the pump, and cut off electric source.

3.1.1 Remove Fan cover

Remove 4 Hex. socket head bolts which hold Fan cover, and remove Fan cover and Cover plate.

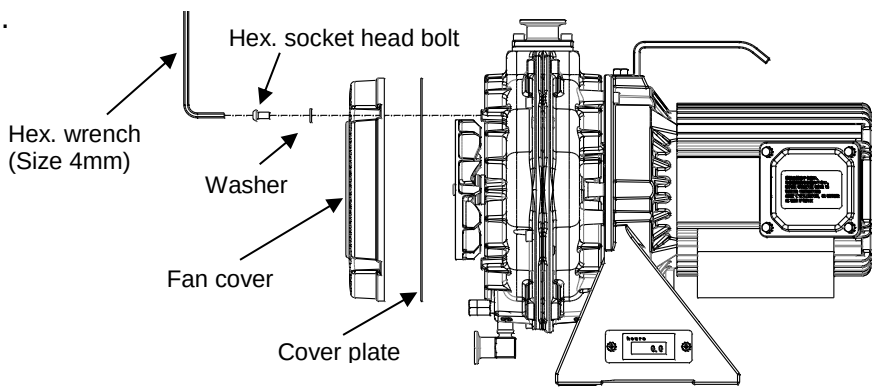

Important

Rotate Fan by hand and check smooth rotation, and remember the feeling of rotating resistance.

When reassembling, check the slightly heavier rotating resistance. If rotation is not smooth, something will go wrong inside the pump. Check each Bearing and replace it if something goes wrong.

3.1.2 Remove Inlet flange

①Remove Hex. socket head bolts which hold Inlet flange, and remove Inlet flange, O-ring, Inlet filter, Inlet adapter, Inlet gasket.

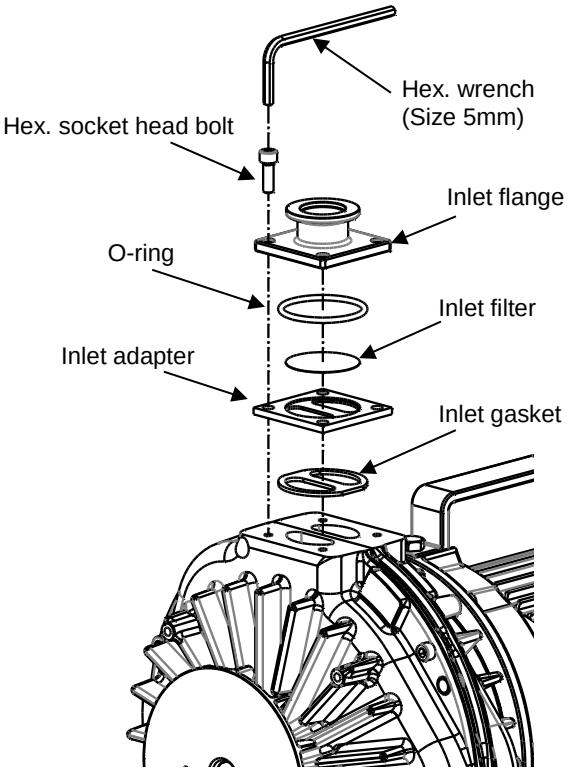

3.1.3 Remove Body set

①Place the pump vertically with Motor downwards.

②Remove Hex. socket head bolts which hold Motor set and FS(1), lift Body set and separate it from Motor set.

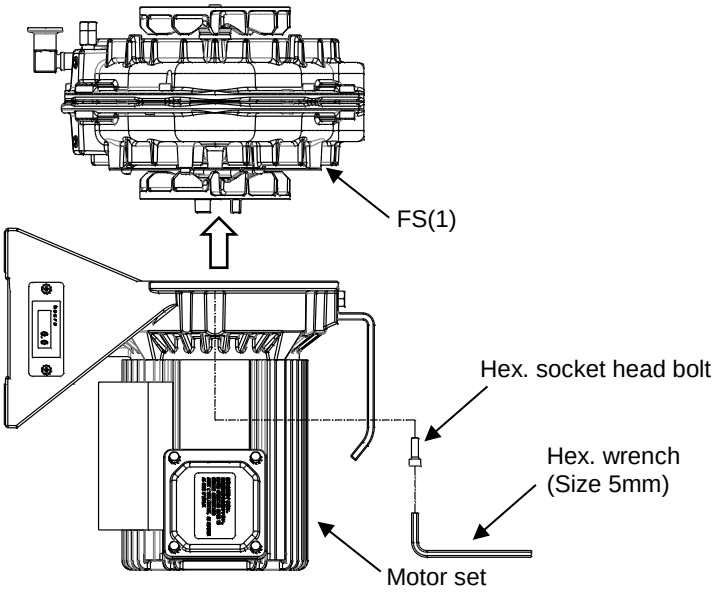

Important

Rotate Motor shaft by hand and check the smooth rotation.

If rotation is not smooth with some resistance, check Motor bearings and Motor, and replace it if something goes wrong.

3.1.4 Disassembly of Body set

①Place Body set with FS(1) downwards on 2 blocks (wood which height is over 55mm).

②Remove Hex. socket head bolt which fixes Fan(2) on FS(2) side, and remove Washer, Fan(2), Parallel key and Fan spacer.

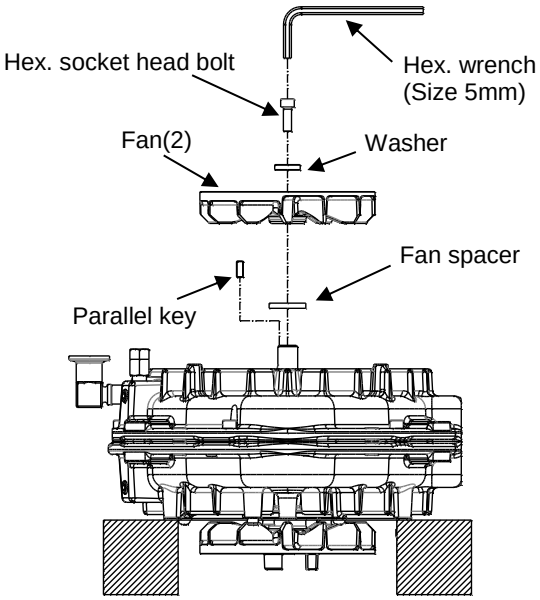

③Loosen Hex. socket head bolts diagonally by turns which fix FS(2), and remove them.

④Pull FS(2) towards axis and remove it.

⑤Pull O-ring and Inner ring towards axis and remove it.

⑥Pull OS towards axis and remove it.

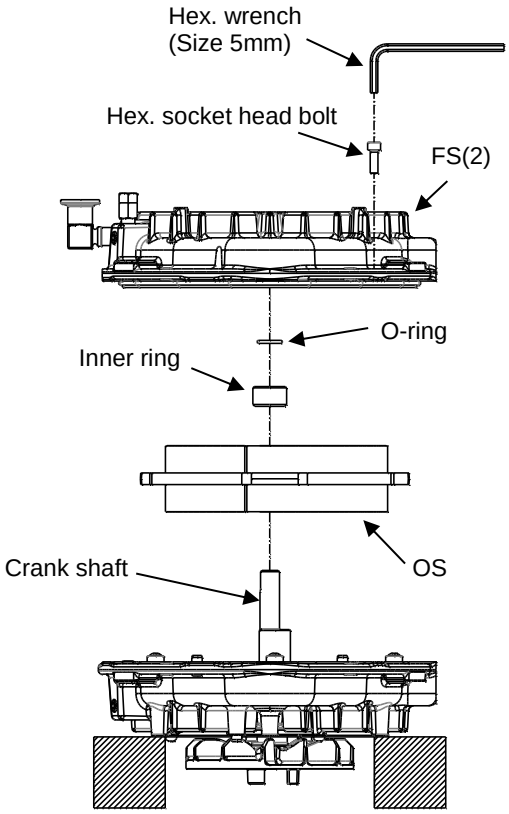

Important

- **When pulling FS(2) and OS, pay attention not to damage Inner ring, Shaft seal, or Needle bearing with angle of key groove of Crank shaft.**
- **When you cannot pull OS due to damaged OS Needle bearing, first do ⑦ item, pull Crank shaft and OS at the same time, and separate OS and Crank shaft from FS(2) side.**

⑦Remove Hex. socket head bolt which holds Fan(1) on FS(1) side, and remove a Washer and Fan(1).
⑧Remove Parallel key and pull Crank shaft, O-ring and Inner ring.

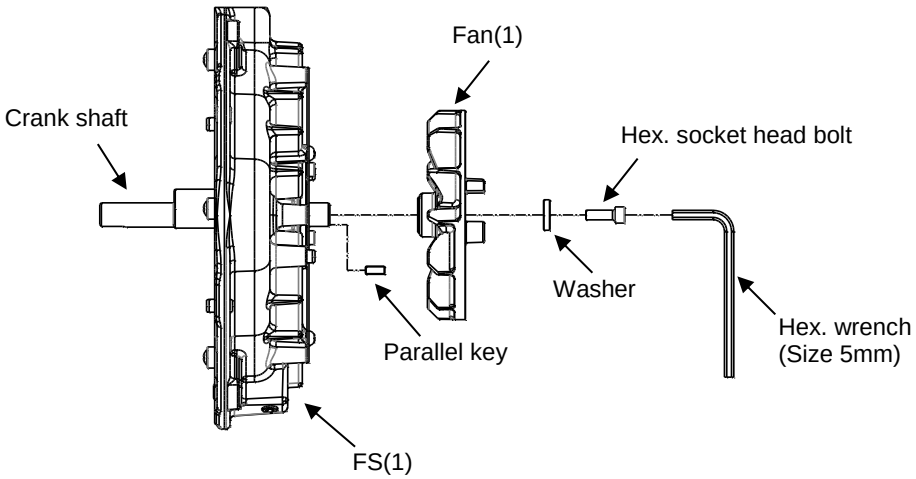

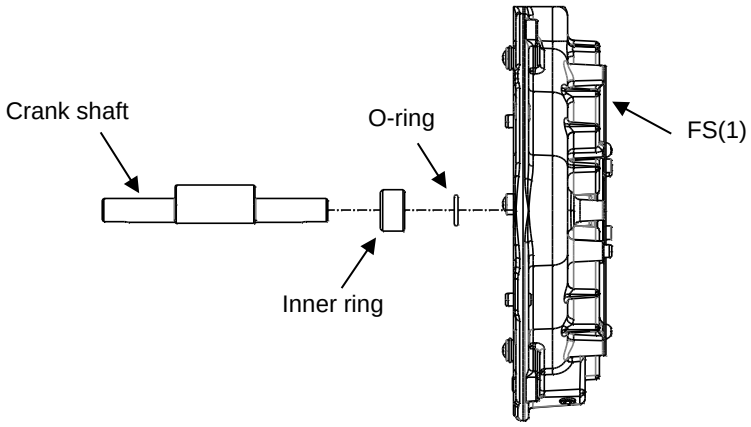

3.2 Clean Tip seal

Important

- **Check that top of Tip seal comes out from the groove of FS(1), FS(2) and OS (by about 0.1mm) at any point.**
- **If extrusion is less than 0.1mm at any point, replace all Tip seal at the same time (refer to 4.10).**
- **Tip seal height: 2.20~2.30mm**
- **If it is not replaced, tip of scroll wrap contacts counter surface (bottom) and damages it, resulting in failure.**

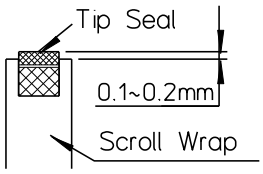

3.2.1 Remove Tip seal

Gradually remove old Tip seal from end of outer periphery edge.

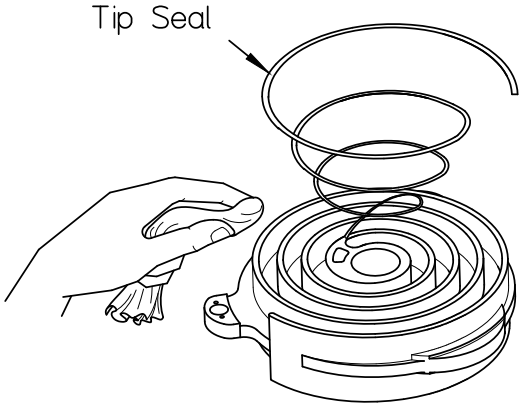

Important

- **If you feel resistance when removing Tip seal, dust will attach to side and groove of Tip seal. Wipe out dust from the groove and Tip seal by using clean cloth and bamboo spatula.**
- **Remember each Tip seal position to return it to original position.**

3.2.2 Clean Tip seal

Lightly wipe out both sides of Tip seal while black sliding material facing upwards.

⚠ CAUTION

Never use solvent when cleaning inside the pump and Tip seal. ※If done, it can shorten lifetime.	⃠ **Never use solvent**

Important

- **If you feel resistance when removing Tip seal, dust will attach to side and groove of Tip seal. Wipe out dust from the groove and Tip seal by using clean cloth and bamboo spatula.**
- **Never use solvent.**
- **It makes tip seal expand to clean too hard, which results in making it difficult to insert it into the groove.**

3.3 Maintenance of FS(1)

3.3.1 Clean FS(1)

①Wipe out dust on wall and bottom of scroll wrap and inside the Inlet with clean cloth.
②Wipe out dust on side and bottom of Tip seal groove by using clean cloth and bamboo spatula.
③Blow out the whole unit with air.

Important

- **When cleaning, protect it with masking tape to prevent foreign matter such as wear debris and waste lint from entering the bearing and shaft seal.**
- **If you feel some resistance to remove Tip seal, be sure to wipe out dust.**
- **Be sure to clean Tip seal groove with soft bamboo spatula since groove is fragile.**
- **Always use clean cloth. Mixing with other grease can greatly deteriorate its performance.**
- **Pay attention not to leave the waste thread in the Bearings.**

④Wipe out dust Pin crank.
- Turn Pin crank by hand and check if it turns lightly and smoothly.
- If you feel rumble when it is turning by hand, replace Pin crank set with new one.

⑤When Pin crank set is replaced, remove two screws located aside of Pin crank set and remove Pin crank set.
- Wipe out adhesive and dust around screws. Blow out the whole unit with air.
- Fit Pin crank set and tighten by screw with slight amount of Threadlocker (medium strength) e.g. LOCTITE 242.

Important

- **Use threadlocker (medium strength) e.g. LOCTITE 242.**
- **Apply slight amount of threadlocker to thread section.**
- **Wipe out extruded threadlocker with clean cloth.**

⑥Turn inner ring of the Ball bearing by hand and check that it turns lightly and smoothly.
⑦If you feel some rumble, replace the Ball bearing according to 4.4.1～4.4.2 and 4.4.7～4.4.8.

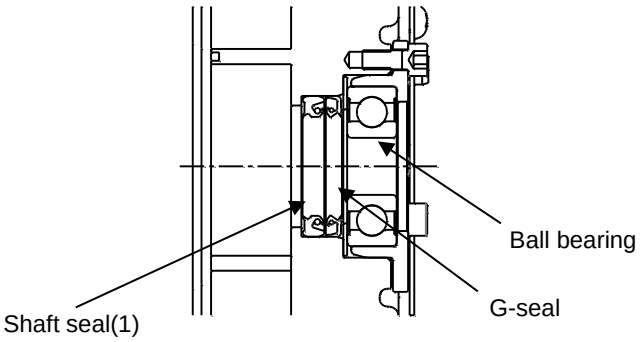

⑧Fill **ISP exclusive grease [0.1ml (0.2g)]** between 2 lips of Shaft seal(1) and G-seal with syringe evenly around whole periphery.

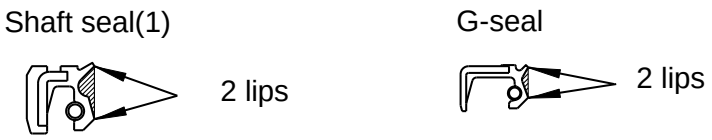

⚠ CAUTION	
Danger of shorter operating lifetime and Bearing failure. **Be sure to use ISP exclusive grease.** ※Mixing with other oil can shorten grease lifetime and damage Bearings.	**Use ISP exclusive grease**

3.3.2 Fit Tip seal

①Place white soft back-up part facing downwards and black hard sliding material facing upwards.
②Fit Tip seal from the center of FS(1).
③Internally extruded section near the center of wrap functions as a stopper to hold Tip seal. Completely push sliding material side by hand into the groove.

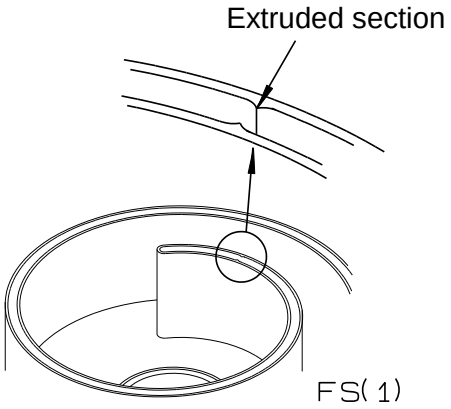

3.4 Maintenance of FS(2)

3.4.1 Clean FS(2)

①Wipe out dust on wall and bottom of scroll wrap and inside the Inlet with clean cloth.
②Wipe out dust on side and bottom of Tip seal groove by using clean cloth and bamboo spatula.
③Blow out the whole unit with air.

Important

- **When cleaning, protect it with masking tape to prevent foreign matter such as wear debris and waste lint from entering the bearing and shaft seal.**
- **If you feel some resistance to remove Tip seal, be sure to wipe out dust.**
- **Be sure to clean Tip seal groove with soft bamboo spatula since groove is fragile.**
- **Always use clean cloth. Mixing with other grease can greatly deteriorate its performance.**
- **Pay attention not to leave the waste thread in the Bearings.**

④Turn inner ring of the Ball bearing by hand and check that it turns lightly and smoothly.
⑤If you feel some rumble, replace the Ball bearing according to 4.5.1 and 4.5.6.

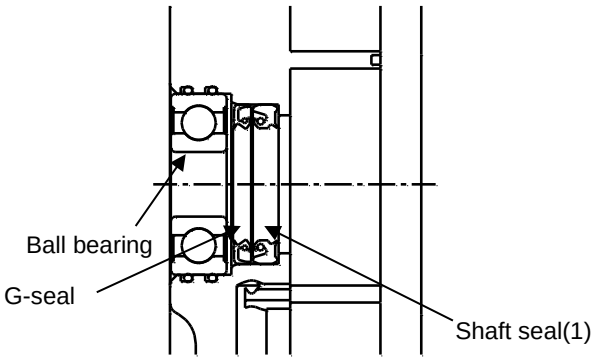

⑥Fill **ISP exclusive grease [0.1ml (0.2g)]** between 2 lips of Shaft seal(1) and G-seal with syringe evenly around whole periphery.

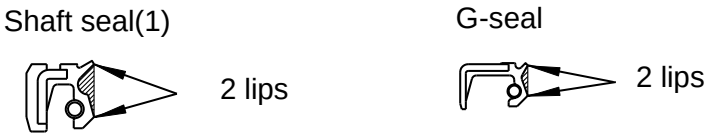

⚠ CAUTION	
Danger of shorter operating lifetime and Bearing failure. **Be sure to use ISP exclusive grease.** ※Mixing with other oil can shorten grease lifetime and damage Bearings.	**Use ISP exclusive grease**

3.4.2 Fit Tip seal

①Place white soft back-up part facing downwards and black hard sliding material facing upwards.
②Fit Tip seal from the center of FS(2).
③Internally extruded section near the center of wrap functions as a stopper to hold Tip seal. Completely push sliding material side by hand into the groove.

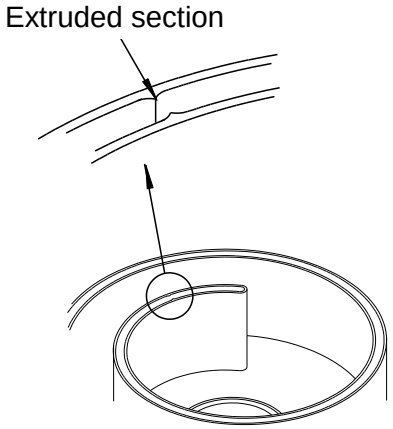

FS(2)

3.5 Maintenance of OS

3.5.1 Clean OS

①Wipe out dust on wall and bottom of scroll wrap with clean cloth.
②Wipe out dust on side and bottom of Tip seal groove by using clean cloth and bamboo spatula.
③Blow out the whole unit with air.
④Fully wipe out old grease attached to Needle bearings in the center of OS with clean cloth while turning roller until no more comes out.

Important

- **If you feel some resistance to remove Tip seal, be sure to wipe out dust.**
- **Be sure to clean Tip seal groove with soft bamboo spatula since groove is fragile.**
- **Always use clean cloth. Mixing with other grease can greatly deteriorate its performance.**
- **Pay attention not to leave the waste thread in the Bearings.**

3.5.2 Needle bearing grease up

①Fill **ISP exclusive grease** to roller section of Needle bearing. Apply **ISP exclusive grease** between roller and cage while turning roller.
②Evenly fill **ISP exclusive grease [0.2ml (0.4g) / 1section]** between 2 lips of G-seal.

⚠ CAUTION

Danger of shorter operating lifetime and Bearing failure. **Be sure to use ISP exclusive grease.** ※Mixing with other oil can shorten grease lifetime and damage Bearings.	**Use ISP exclusive grease**

Important

- **Be sure to use clean rubber gloves when applying grease to Needle bearing.**
- **Apply grease a bit more to both roller and cages which are somewhat worn, different from new Bearing.**

3.5.3 Fit Tip seal

①Place white soft back-up part facing downwards and black hard sliding material facing upwards.
②Fit Tip seal in accordance with shape at the center of OS and insert gradually further towards outside.

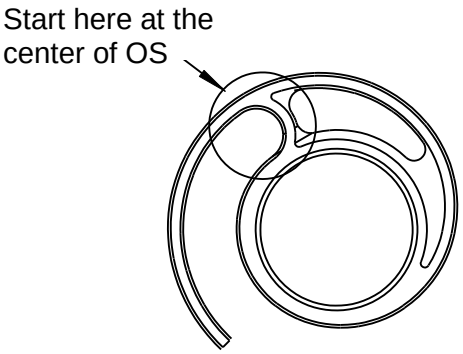

3.6 Maintenance of Inlet flange

①Clean Inlet filter, Inlet adapter, Inlet gasket and inside the Inlet flange.
②Clean the Inlet filter with air blow.

3.7 Maintenance of Outlet flange

①Loosen Nut and remove Outlet flange.
②Remove O-ring inside the exhaust hole of FS(2), and clean the exhaust hole inner diameter and outlet flange by using cloth and brass brush.
③Remove C-type snap ring in the Outlet flange with snap ring pliers. Remove Exhaust guide, Exhaust spring and Exhaust valve.
④Clean exhaust flange and the exhaust hole of the exhaust flange and the sealing surface against the exhaust valve by using clean cloth and bamboo spatula so as not to damage, and blow out with air.
⑤Fit Exhaust valve, Exhaust spring, and Exhaust guide into the Exhaust flange, and hold it with a C-type snap ring. Make sure that the Exhaust valve is at the center.
⑥Fit O-ring in the exhaust hole O-ring groove.
⑦Fit Outlet flange with Nut to FS(2),and tighten Nut and fix it.

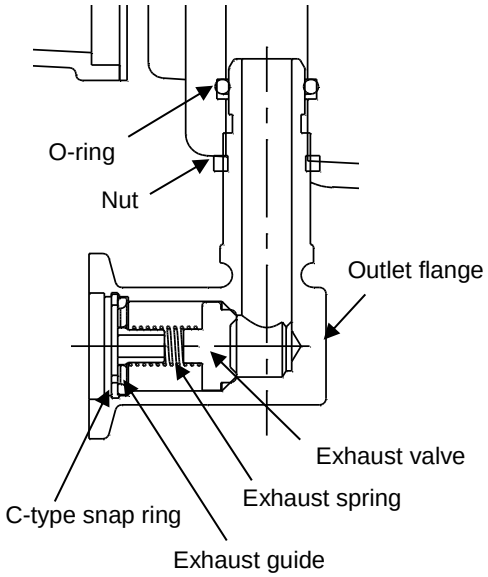

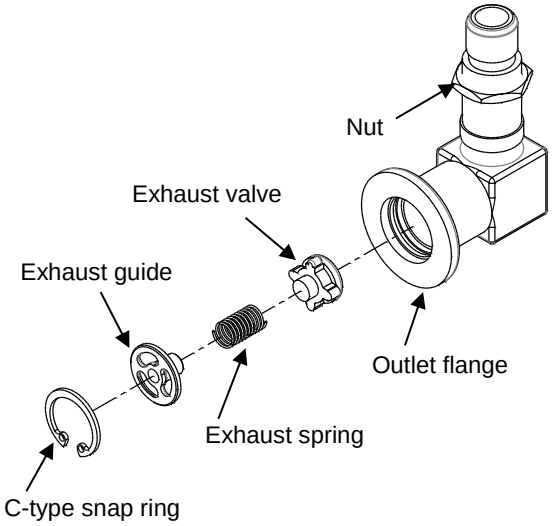

Important
Exhaust valve should be at center.

3.8 Assembly

Assemble in reverse order of disassembly.

3.8.1 Assemble Body set

①Place 2 blocks (wood which height is over 55mm) on horizontal workbench and FS(1) on the top of them.

②Fit Crank shaft, O-ring and Inner ring vertically to FS(1).

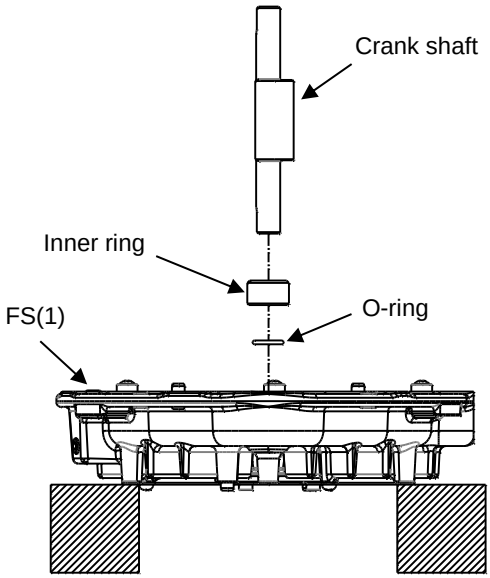

Important

When fitting Crank shaft to FS(1), pay attention not to damage Bearing and shaft seal with the angle of Key groove of Crank shaft.

③Turn eccentric section of both Crank shaft and Pin crank in the same direction. Put the OS Insert guide on the Crank shaft as shown in the drawing.

④Fit OS to FS(1).

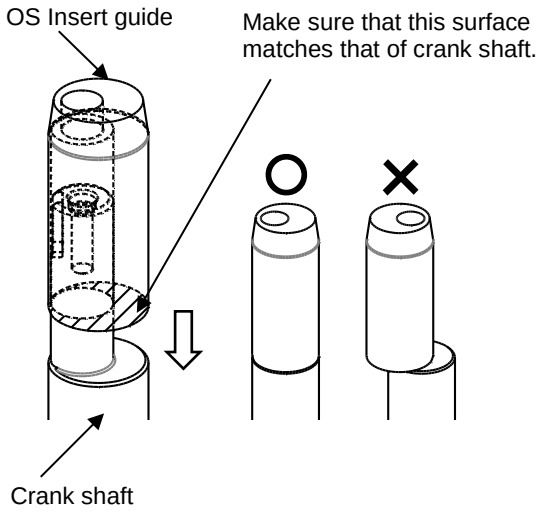

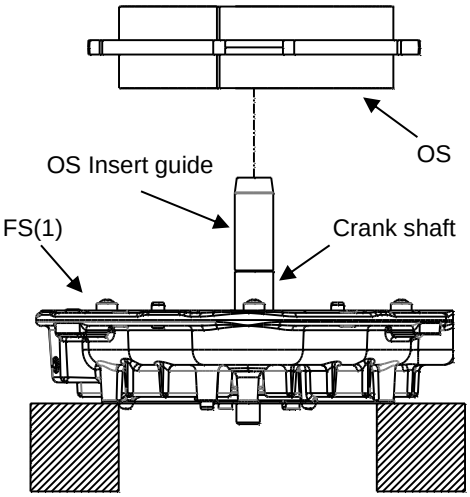

Important

Pay attention that Tip seal does not come off when fitting OS.

⑤Fit the Inner ring and O-ring into the Crank shaft.
⑥Fit O-ring to FS(2) and assemble to FS(1).
⑦Tighten the Hex. socket head bolts alternately in the diagonal direction.

Tightening torque
7.8±0.7Nm (80±7kg･cm)

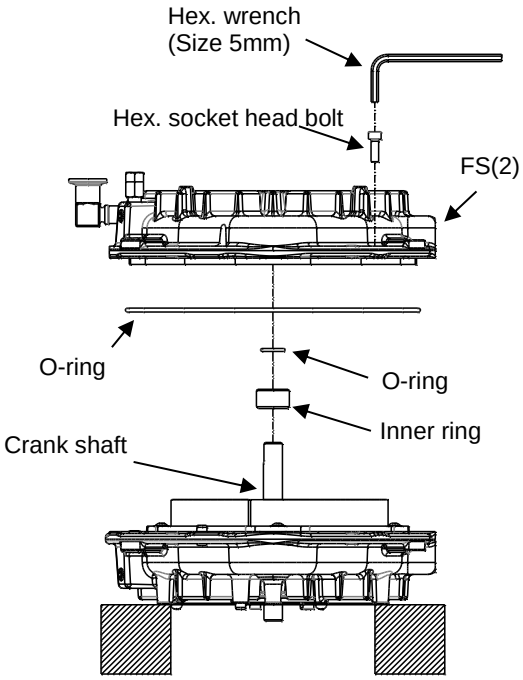

Important

- **Check that there is no dust or damage on the surface of O-ring for FS(1), FS(2) and O-ring surface.**
- **Check that O-ring does not come off from mating side and Tip seal does not come off from the groove.**
- **Diagonally tighten Hex. socket head bolts fixing FS(2) by turns in order to tighten evenly.**

⑧Fit Fan spacer, Parallel key and Fan(2) to FS(2), apply slight amount of **threadlocker (medium strength) e.g. LOCTITE 242** to Hex. socket head bolts and fully tighten along with Washer.

Tightening torque
14.7±0.7Nm (150±7kg･cm)

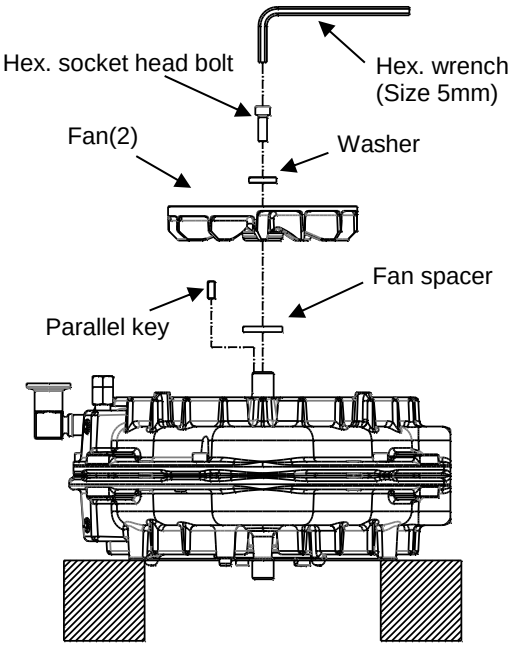

⑨Stand Body set vertically, fit Parallel key, Fan(1) and Washer. Apply slight amount of **threadlocker (medium strength) e.g. LOCTITE 242** to Hex. socket head bolts and fully tighten along with Washer.

Tightening torque	**14.7±0.7Nm (150±7kg･cm)**

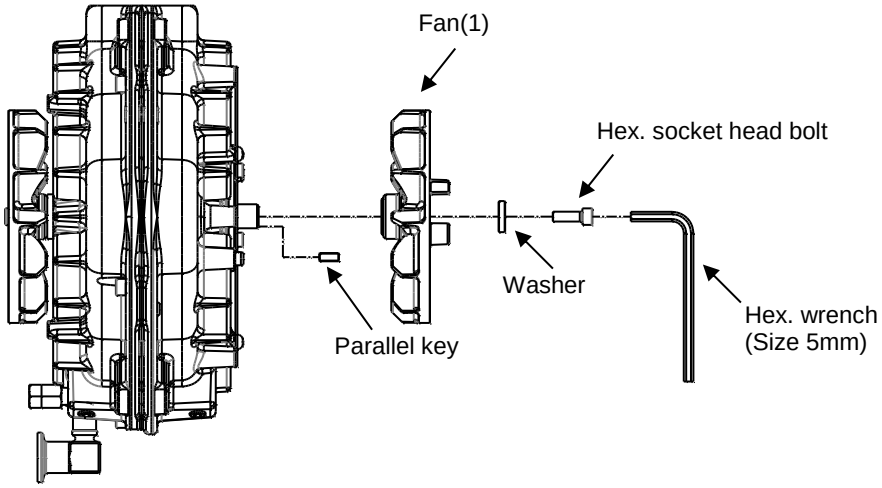

Important

- **Turn Fan(2) by hand and check that turns smoothly.**
  If rotation is heavy, disassemble again and check that tip seal does not come off.
- **Use threadlocker (medium strength) e.g. LOCTITE 242.**
- **Apply slight amount of threadlocker to thread section.**
- **Wipe out extruded threadlocker with clean cloth.**

3.8.2 Fit Body set

①Stand Motor set and Body set vertically and fit Spider to Coupling.
②Match nail of Fan with nail of Spider, Parallel pin with hole position, and fit Body to Motor set.
③Check that Fan(2) turns smoothly and tighten Hex. socket head bolts.

Tightening torque
14.7±0.7Nm (150±7kg･cm)

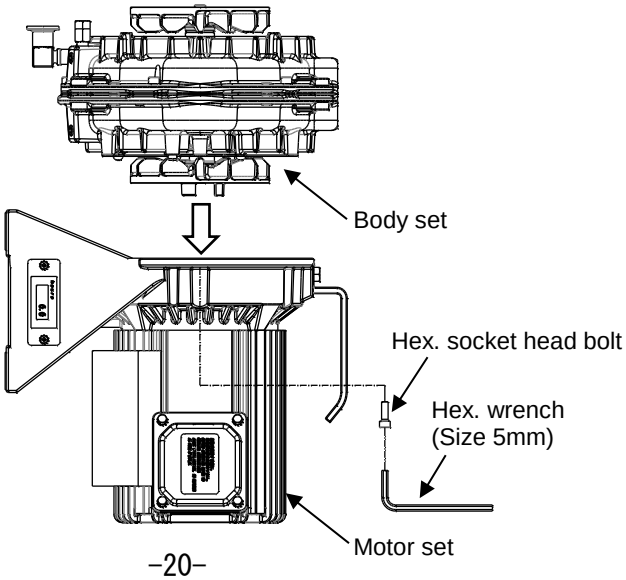

3.8.3 Fit Inlet flange

①Fit Inlet gasket, Inlet adapter, Inlet filter, O-ring and Inlet flange.

②Apply slight amount of **threadlocker (medium strength) e.g. LOCTITE 242** to Hex. socket head bolts.

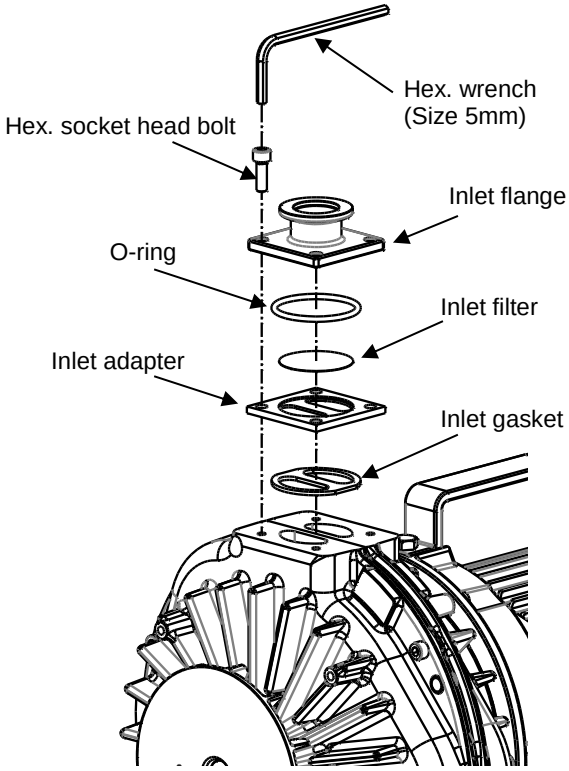

Important

- **Fit Body set to Motor set so that Inlet can face the same direction as before maintenance.**
- **Use threadlocker (medium strength) e.g. LOCTITE 242.**
- **Apply slight amount of threadlocker to thread section.**
- **Wipe out extruded threadlocker with clean cloth.**

3.8.4 Fit Fan cover

- Apply slight amount of threadlocker (medium strength) e.g. LOCTITE 242 to the thread section of Hex. socket head bolts.
- Tighten Fan cover and Cover plate(2) together with the bolts.

3.9 Operation

Operate pump for 2~3 hours and check that current is within rated one (refer to 4.14) and that there is no abnormal sound and vibration. Also inspect the pump performance (refer to 4.13).

When you have to replaced Tip seal, be sure to do break-in operation (refer to 4.12).

4. Every two years or every 16000 hours maintenance and inspection

WARNING	
Danger of failure and bodily injury **Conduct periodical maintenance and inspection.** If not, it can cause insufficient performance, failure of vacuum pump, and bodily injury.	**Conduct periodical maintenance and inspection**
Danger of burns **Conduct maintenance and inspection only after vacuum pump becomes cool enough.** Maintenance and inspection soon after vacuum pump stops can cause burn injury.	**Be careful about high temperature**
Danger of restart **Be sure to switch off electric source before maintenance or inspection.** **Single-phase motor has a thermal protector.** Vacuum pump restarts become cool without warning after vacuum pump.	**With a thermal protector [Only single-phase motor]**
Danger of electric shock **Be sure to conduct maintenance and inspection after you turn off electric source.** If not, it can cause bodily injury from electric shock or turning object.	**Turn off electric source**

4.1 Disassembly

Disassemble in the same way as 3.1.

4.2 Replace O-ring

When replacing O-rings, clean up the ditch for O-rings by clean cloth and put new O-rings.
Refer to 7. Extended drawing for the positions of O-rings.

Important
・Pay attention not to damage O-ring groove and sealed O-ring surface. **・Pay attention not to leave any thread of cloth in O-ring surface and O-ring groove.**

4.3 Remove Tip seal

Remove Tip seal in the same way as 3.2.1.

4.4 Maintenance of FS(1)

4.4.1 Remove Ball bearing set

①Remove Hex. socket head bolts which hold Ball bearing set.

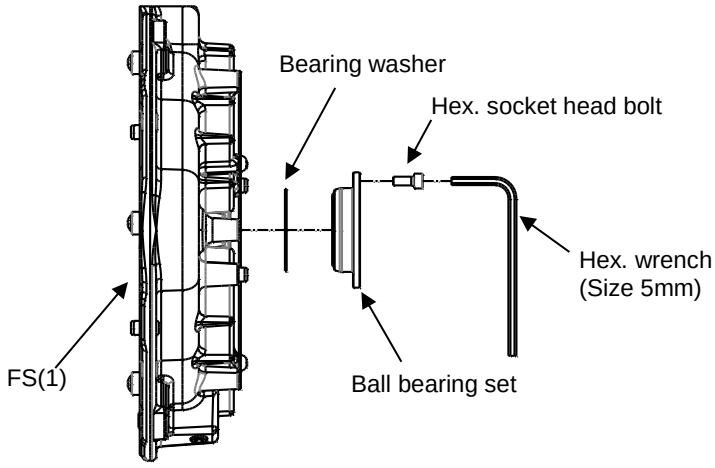

②Insert 2 straight edge screwdriver under outer diameter of Ball bearing set, lift it up and remove it.

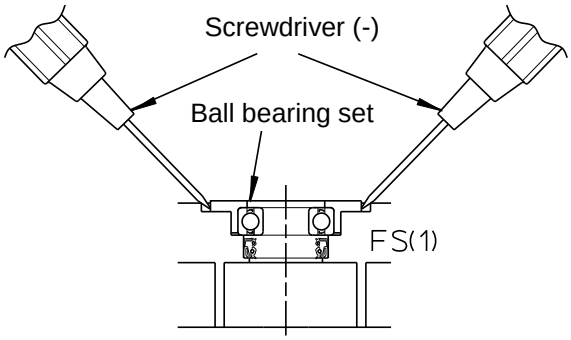

4.4.2 Remove Ball bearing

①Fit Fixture 17 (pay attention to direction) to Bearing from flange side of Bearing case side.

②Fit Fixture 9B and12 to Bearing case from the opposite side and screw M12 Hex. socket head bolt along with Hex. nut and Washer.

③Fix Hex. socket head bolt with Hex. wrench and turn Hex. nut to remove Ball bearing.

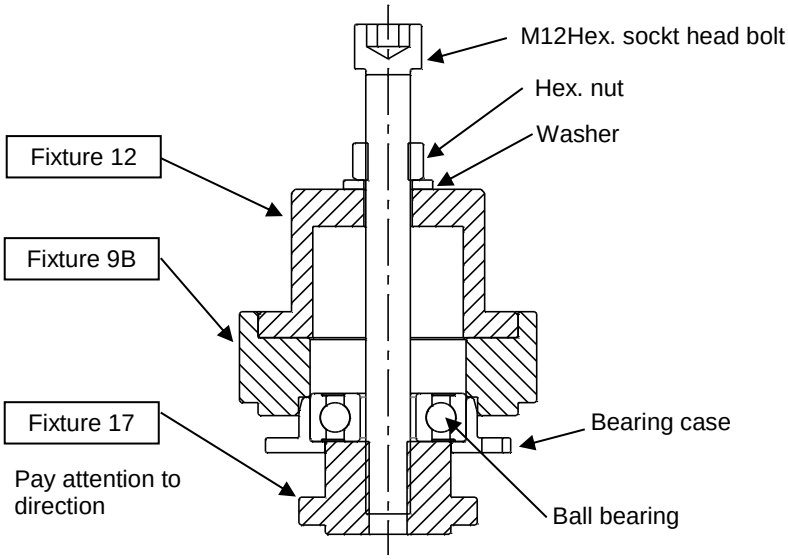

4.4.3 Remove G-seal and Shaft seal(1)

①Insert straight edge screwdriver to G-seal from the scroll side, hit the screwdriver and remove it.

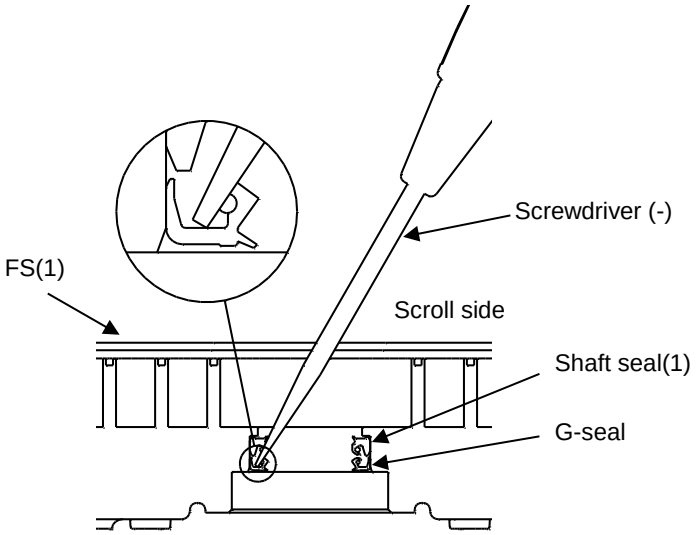

②Insert Fixture 1-E to Shaft seal(1) from scroll side, fit Fixture 5 to FS(1) from the opposite side, and screw M10 Hex. socket head bolt with Washer, and Hex. nut.

③Fix Hex. socket head bolt with Hex. wrench and turn Hex. nut to remove Shaft seal(1).

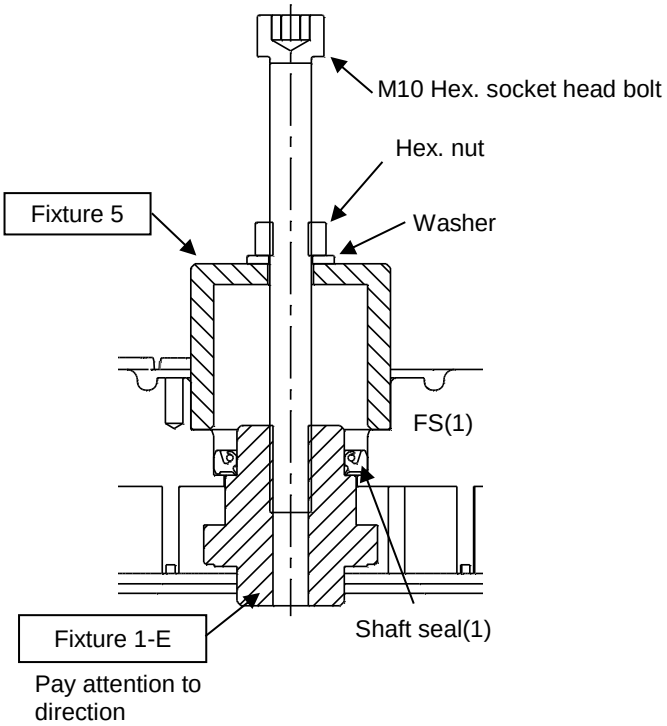

Important

- **Pay attention to direction of Fixture 1-E.**
  Check direction of Fixture 1-E in the drawing above.
- **Remove Shaft seal(1) toward the fin side (opposite side of scroll).**

4.4.4 Remove Miniature ball bearing of Pin crank set

①Remove two screws located aside of Pin crank set on FS(1) with cross head screw driver and remove Pin crank set.

②Hold side of Pin crank wide 12mm by thin spanner and remove screw with fixes Miniature ball bearings (small), and remove Miniature ball bearings (small).

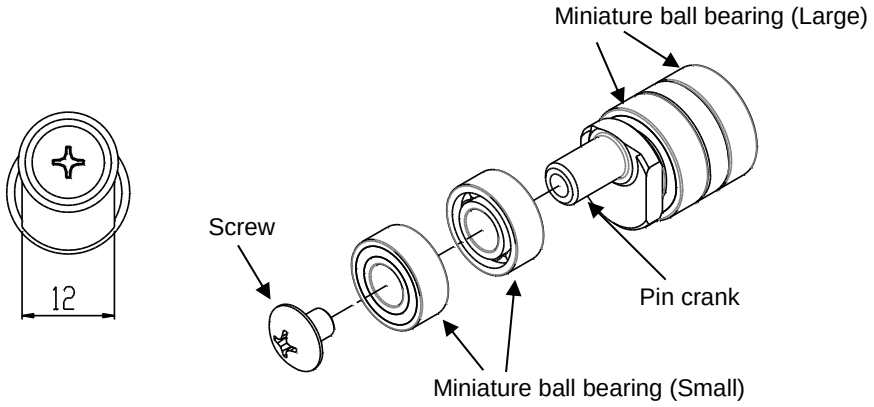

Important

Pay attention not to damage Miniature ball bearings by spanner when remove the screw.

③Wipe out dust Pin crank.

- Holding large size Miniature ball bearings and turn Pin crank by hand and check if it turns lightly and smoothly.
- If you feel rumble when it is turning by hand, replace Pin crank set with new one.

4.4.5 Clean FS(1)

Clean FS(1) in the same way as 3.3.1.

4.4.6 Fit Shaft seal(1)

①Apply slight amount of threadlocker (medium strength) e.g. LOCTITE 242 to outer periphery of new Shaft seal(1).
②Insert Fixture 15-E and Shaft seal(1) to Fixture 1-E and fit it to FS(1) from the fin side.
③Fit fixture 2-2 and 5 in this order to FS(1) from scroll side, and screw M10 Hex. socket head bolt along with Hex. nut and Washer.
④Fix Hex. socket head bolt with Hex. wrench and turn Hex. nut to fit Shaft seal(1).
⑤Wipe out extruded threadlocker with clean cloth.

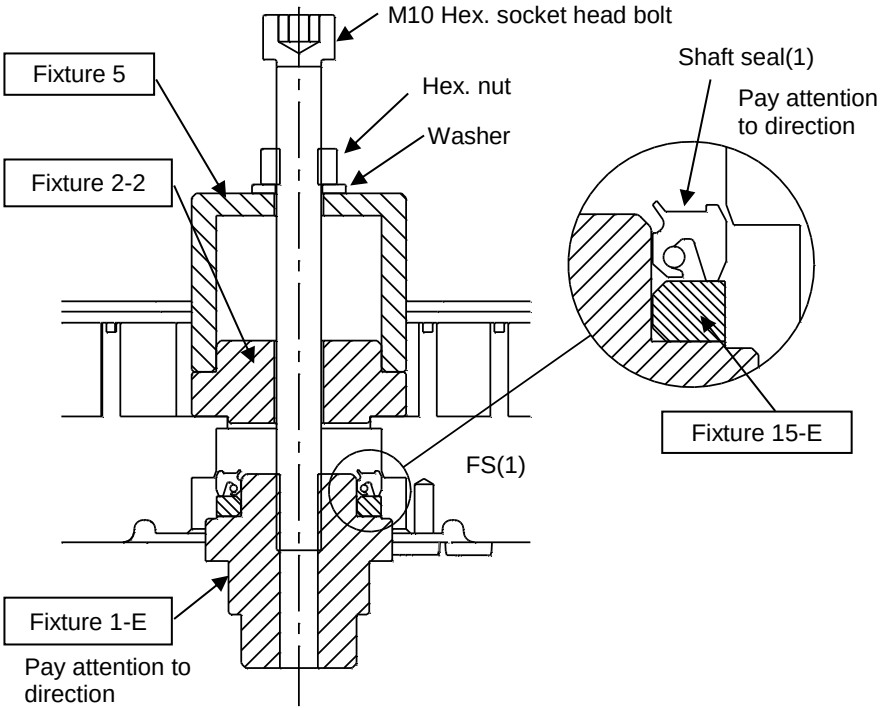

Important

- **Check direction of Fixtures and Shaft seal(1).**
  Side of Shaft seal(1) where you can see spring faces Fixture.
- **Use threadlocker (medium strength) e.g. LOCTITE 242.**
- **Apply slight amount of threadlocker to thread section.**
- **Wipe out extruded threadlocker with clean cloth.**

4.4.7 Fit G-seal

①Insert new G-seal to Fixture 1-E and fit it to FS(1) from fin side.
②Fit Fixture 2-2 and 5 in this order to FS(1) from scroll side, and screw M10 Hex. head bolt along with Hex. nut and Washer.
③Fix Hex. socket head bolt with Hex. wrench and turn Hex. nut to fit G-seal.
④Fill **ISP exclusive grease [0.1ml (0.2g)]** between 2 lips of Shaft seal(1) and G-seal with syringe evenly around whole periphery.

⚠ CAUTION	
Danger of shorter operating lifetime and Bearing failure. **Be sure to use ISP exclusive grease.** ※Mixing with other oil can shorten grease lifetime and damage Bearings.	**Use ISP exclusive grease**

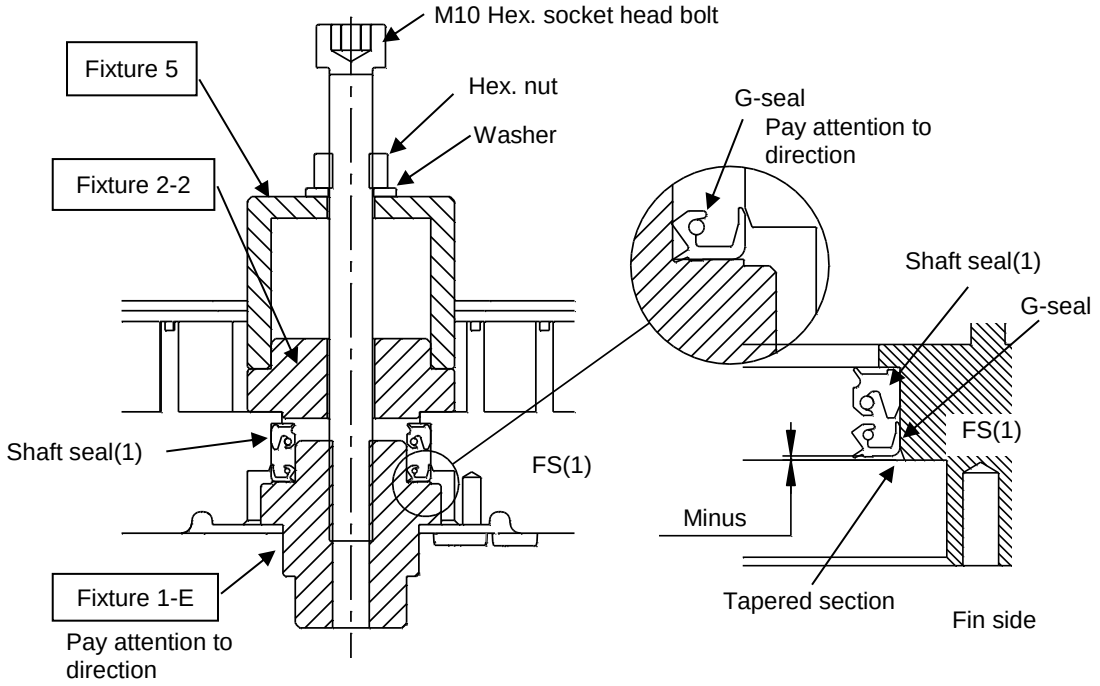

Important

- **Check direction of Fixtures and G-seal.**
  Side of G-seal where you can see spring faces Shaft seal (1).
- **Check that the top of G-seal is lower than bottom of tapered section of FS(1).**
  If not, tighten further with Fixture again in the same direction.

4.4.8 Fit Ball bearing

①Wipe out dust and grease attached to Bearing case.
②Fit Fixture 17 to Bearing case from flange side. (Pay attention to direction.)
③Fix Fixture 9B to Bearing case from opposite side and insert new Ball bearing horizontally.
④Fit Fixture 18 (pay attention to direction) to Ball bearing and M12 Hex. socket head bolt along with Hex. nut and Washer from Fixture 18 side.
⑤Fix Hex. socket head bolt with Hex. wrench and turn Hex. nut to fit Ball bearing.

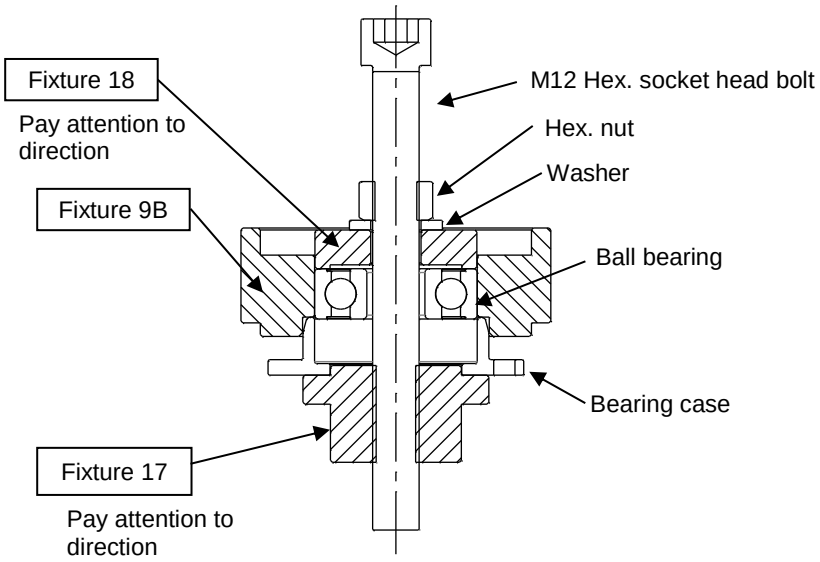

4.4.9 Fit Bearing set

①Wipe out dust and grease attached to Bearing set.
②Put Bearing washer between Bearing set and FS(1).
③Fit 3 holes of Bearing set to screw holes on FS(1) side, and tighten by Hex. socket head bolt with slight amount of threadlocker (medium strength) e.g. LOCTITE 242.

Tightening torque	**2.94±0.3Nm (30±3kg･cm)**

Important

- **Use threadlocker (medium strength) e.g. LOCTITE 242.**
- **Apply slight amount of threadlocker to thread section.**
- **Wipe out extruded threadlocker with clean cloth.**

4.4.10 Fit Miniature Ball bearings of Pin crank

①Insert new Miniature ball bearings into Pin crank as shield side becomes exterior.
②Hold side of pin crank wide 12mm by thin spanner and tighten by screw with slight amount of threadlocker (medium strength) e.g. LOCTITE 242.

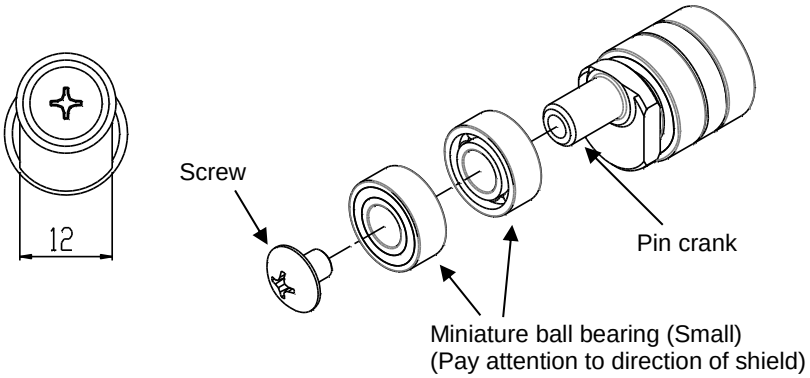

③Fit Pin crank set to FS(1) and tighten by screw with slight amount of threadlocker (medium strength) e.g. LOCTITE 242.

Important

- **Use threadlocker (medium strength) e.g. LOCTITE 242.**
- **Apply slight amount of threadlocker to thread section.**
- **Wipe out extruded threadlocker with clean cloth.**

4.5 Maintenance of FS(2)

4.5.1 Remove Ball bearing

①Insert Fixture 20-E to Ball bearing from scroll side.
②Fit Fixture 22-E to the opposite side.
③Fit Fixture 9B and 12 using the outer periphery of Fixture 22-E as a guide, and M12 Hex. socket head bolt with Hex. nut and Washer.
④Fix Hex. socket head bolt with Hex. wrench and turn Hex. nut to remove Ball bearing.

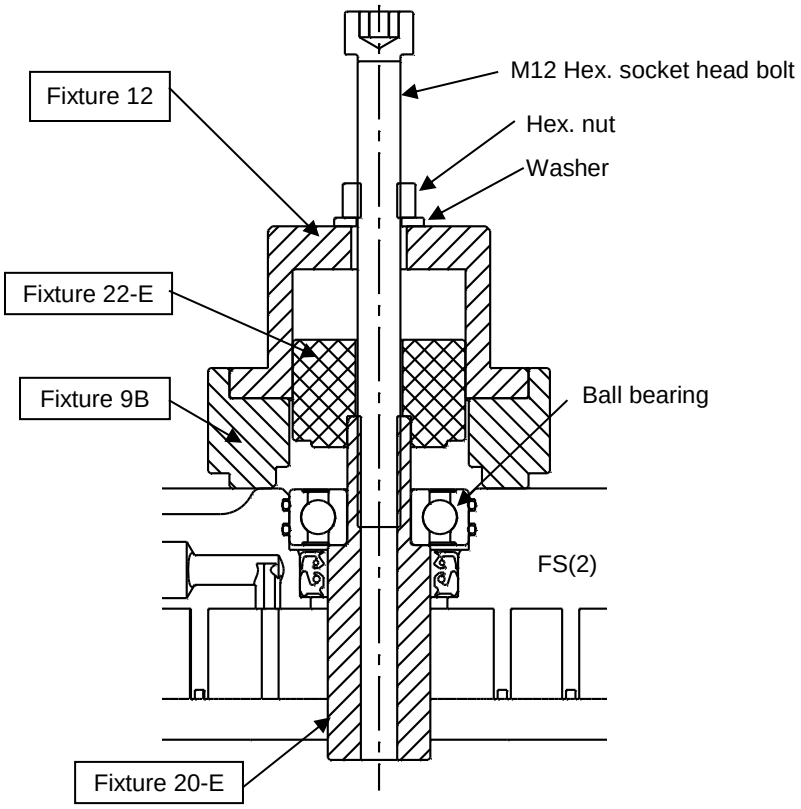

4.5.2 Remove G-seal and Shaft seal(1)

①Insert straight edge screwdriver to G-seal from the scroll side, hit the screwdriver and remove it.

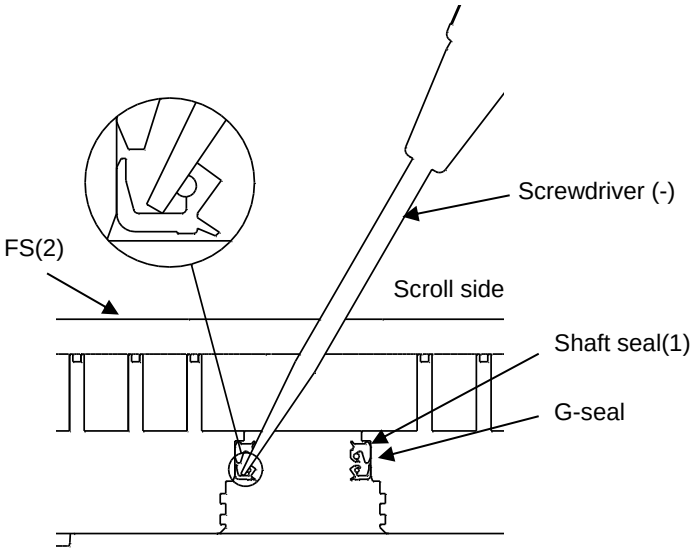

②Insert Fixture 1-E to Shaft seal(1) from scroll side, fit Fixture 9B and 12 to FS(2) from the opposite side, and screw M10 Hex. socket head bolt with Washer, and Hex. nut.

③Fix Hex. socket head bolt with Hex. wrench and turn Hex. nut to remove Shaft seal(1).

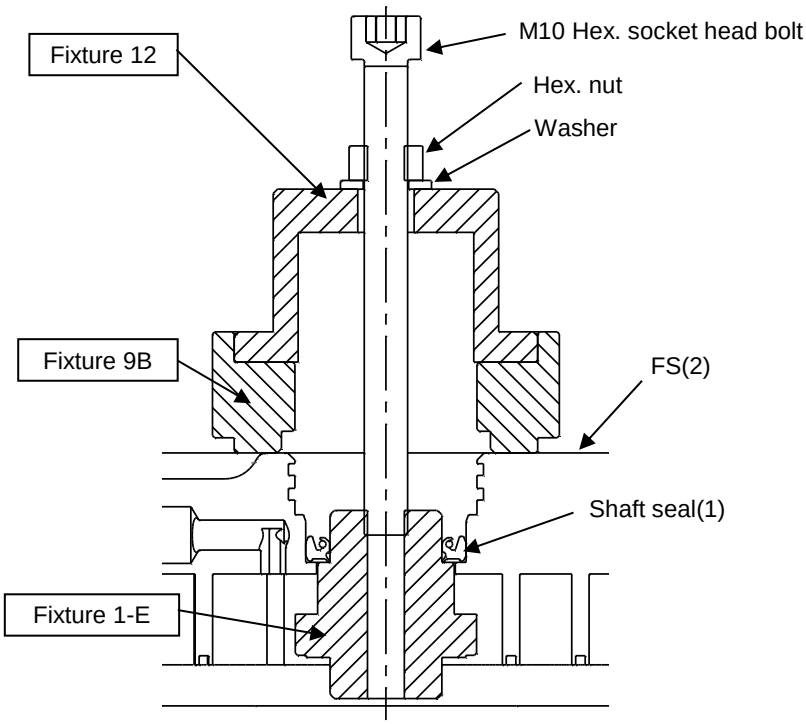

Important

- **Pay attention to direction of Fixture 1-E.**
  Check direction of Fixture 1-E in the drawing above.
- **Remove Shaft seal(1) toward the fin side (opposite side of scroll).**

4.5.3 Clean FS(2)

Clean FS(2) in the same way as 3.4.1.

4.5.4 Fit Shaft seal(1)

①Apply slight amount of threadlocker (medium strength) e.g. LOCTITE 242 to outer periphery of new Shaft seal(1).
②Insert Fixture 15-E and Shaft seal(1) to Fixture 1-E and fit it to FS(2) from the fin side.
③Fit fixture 2-2 and 5 in this order to FS(2) from scroll side, and screw M10 Hex. socket head bolt along with Hex. nut and Washer.
④Fix Hex. socket head bolt with Hex. wrench and turn Hex. nut to fit Shaft seal(1).
⑤Wipe out extruded threadlocker with clean cloth.

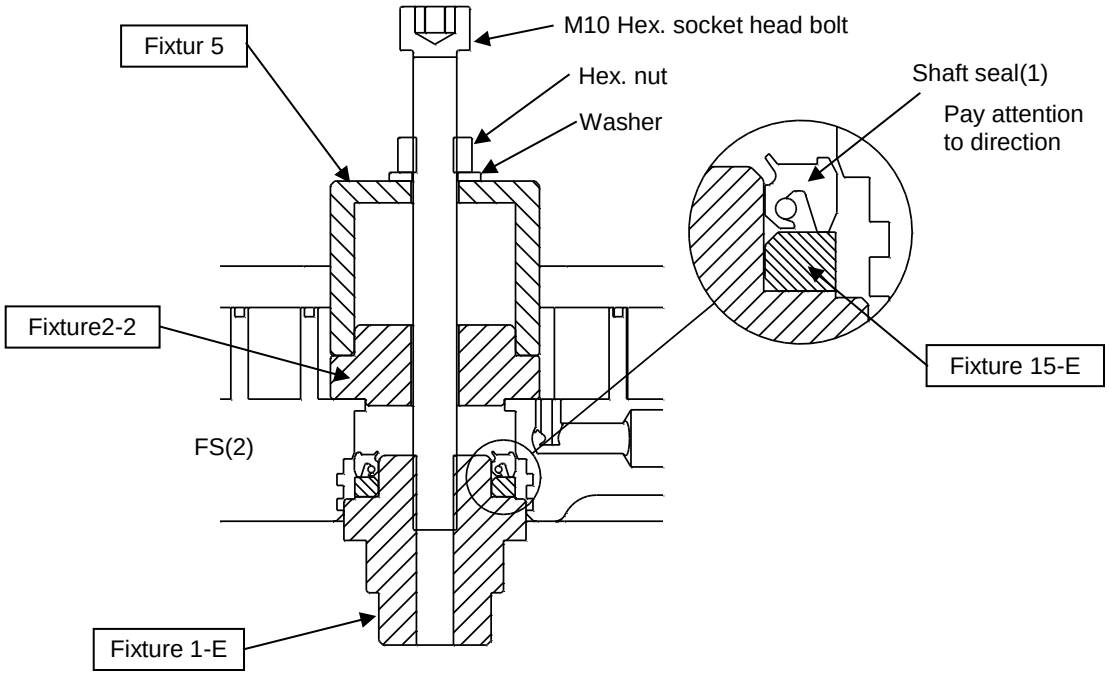

Important

- **Check direction of Fixtures and Shaft seal(1).**
  Side of Shaft seal(1) where you can see spring faces Fixture.
- **Use threadlocker (medium strength) e.g. LOCTITE 242.**
- **Apply slight amount of threadlocker to thread section.**
- **Wipe out extruded threadlocker with clean cloth.**

4.5.5 Fit G-seal

①Insert new G-seal to Fixture 1-E and fit it to FS(2) from fin side.
②Fit Fixture 2-2 and 5 in this order to FS(2) from scroll side, and screw M10 Hex. head bolt along with Hex. nut and Washer.
③Fix Hex. socket head bolt with Hex. wrench and turn Hex. nut to fit G-seal.
④Fill **ISP exclusive grease [0.1ml (0.2g)]** between 2 lips of Shaft seal(1) and G-seal with syringe evenly around whole periphery.

⚠ CAUTION	
Danger of shorter operating lifetime and Bearing failure. **Be sure to use ISP exclusive grease.** ※Mixing with other oil can shorten grease lifetime and damage Bearings.	**Use ISP exclusive grease**

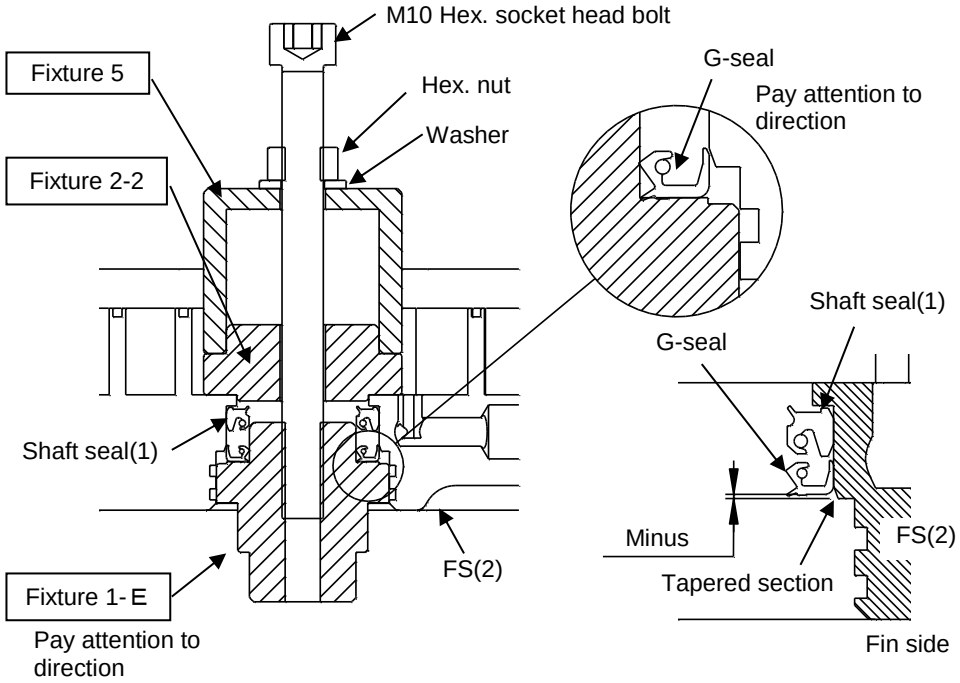

Important

- **Check direction of Fixtures and G-seal.**
  Side of G-seal where you can see spring faces Shaft seal (1).
- **Check that the top of G-seal is lower than bottom of tapered section of FS(2).**
  If not, tighten further with Fixture again in the same direction.

4.5.6 Fit Ball bearing

①Fit new O-rings in the two grooves on FS(2).
②Insert new Ball bearing to Fixture 21-E and fit it to FS(2) from fin side.
③Fit Fixture 22-E to FS(2) from scroll side, and screw M10 Hex. head bolt along with Hex. nut and Washer.
④Fix Hex. socket head bolt with Hex. wrench and turn Hex. nut to fit Ball bearing.

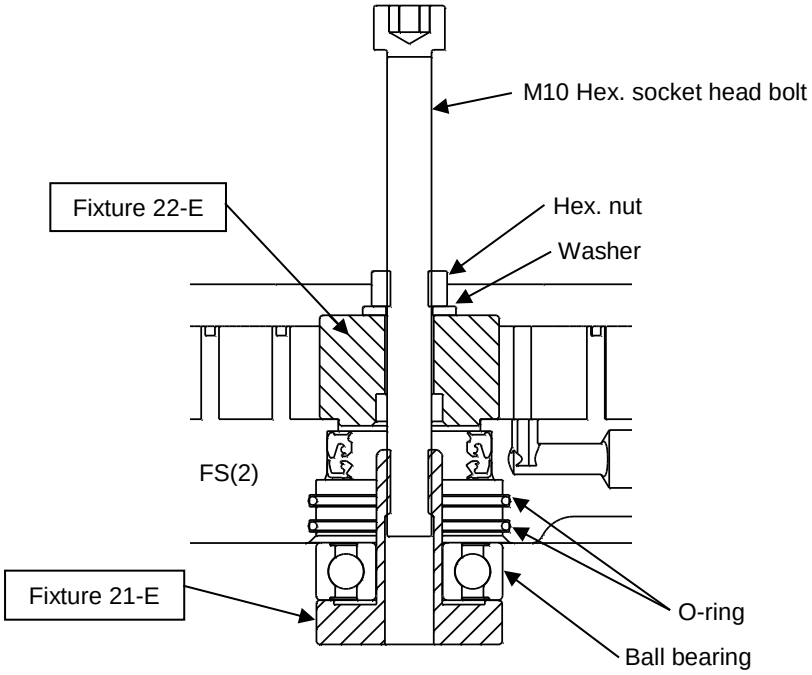

4.6 Maintenance of OS

4.6.1 Remove G-seal

①Place OS on horizontal stand with rubber.
②Place batten on OS and remove G-seal with straight edge screw driver.
③Remove G-seal on the opposite side in the same way.

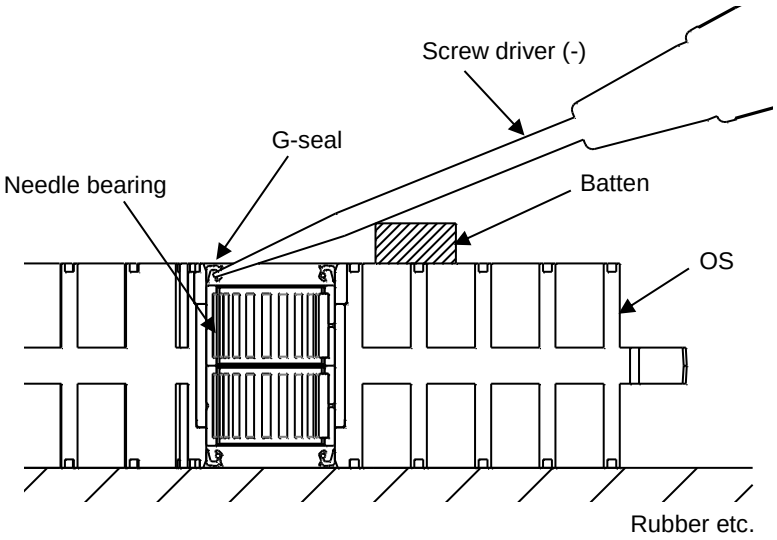

Important

Pay attention not to damage scroll top, bottom and side surface of OS.

4.6.2 Remove Needle bearing

①Insert Fixture 8 to Needle bearing of OS.
②Fit Fixture 10, 11, 9B and 12 in this order from opposite and screw M12 Hex. socket head bolt along with Hex. nut and Washer.
③Fix Hex. socket head bolt with Hex. wrench and turn Hex. nut to remove Needle bearing (a set of 2 bearings).

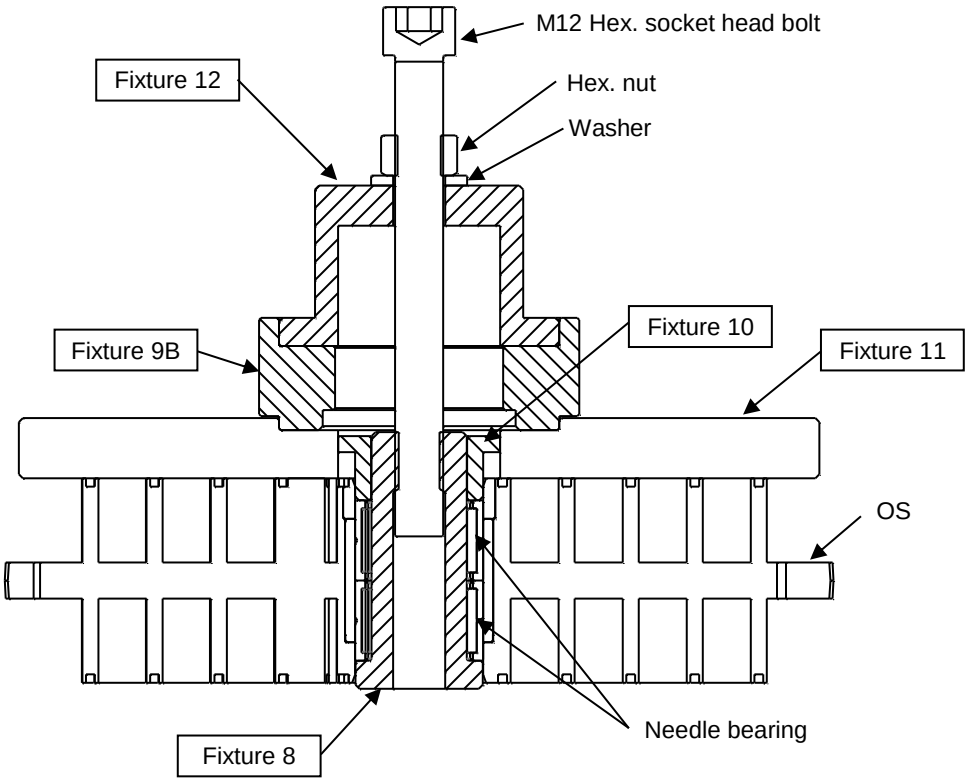

4.6.3 Clean OS

Clean OS in the same way as 3.5.1.

4.6.4 Fit Needle bearing

①Insert new Needle bearing to Fixture 13 and fit it to one side of OS.
②Fit Fixture 10 from opposite.
③Fit Fixture 11 and 12 in this order to Fixture 10 and screw M12 Hex. socket head bolt along with Hex. nut and Washer.
④Fix Hex. socket head bolt with Hex. wrench and turn Hex. nut to fit Needle bearing.
⑤Insert Fixture 10 to Needle bearing side already pressed, insert the other new Needle bearing to Fixture 13, and fit it to OS from the opposite side.
⑥Fit Fixture 11 and 12 in this order to Fixture 10 and screw M12 Hex. socket head bolt along with Hex. nut and Washer.
⑦Fix Hex. socket head bolt with Hex. wrench and turn Hex. nut to fit Needle bearing.

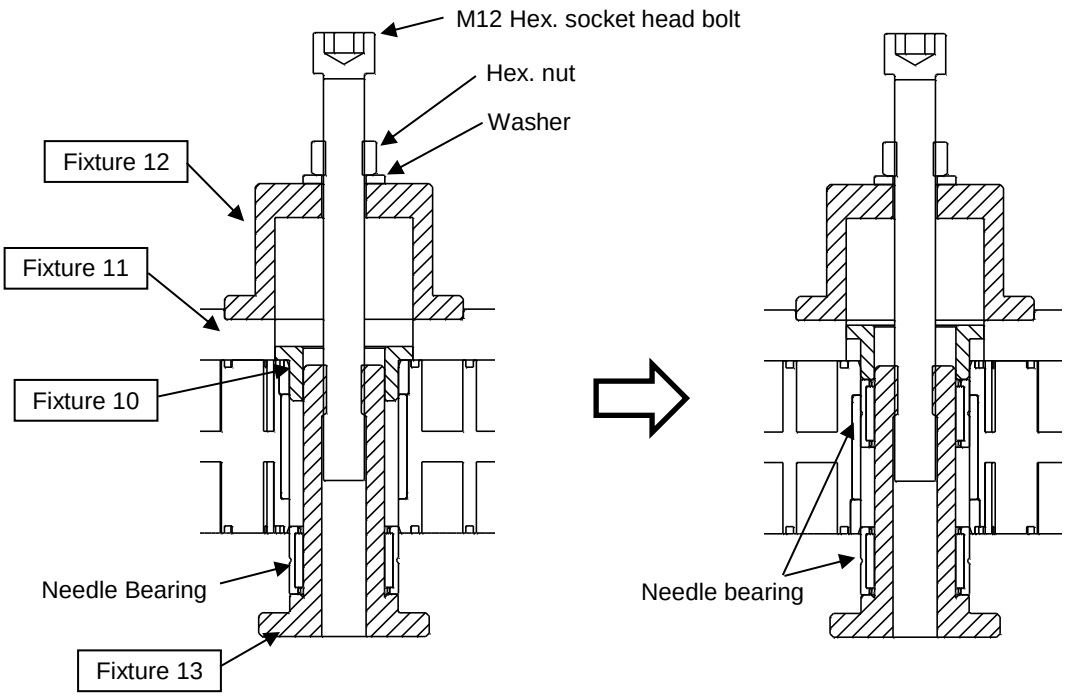

Important

- **Pay attention to direction of Fixtures.**
- **Needle bearing consists of 2pcs.**
  Do not combine with other set of bearing.
- **Pay attention not to damage scroll top, bottom and side surface of OS.**
- **Wipe out dust on Fixtures with clean cloth.**

4.6.5 Fit G-seal

①Insert Fixture 14 and new G-seal to Fixture 13 and fit it to one side of OS.
②Fit Fixture 10 from opposite.
③Fit Fixture 11 and 12 in this order to Fixture 10 and screw M12 Hex. socket head bolt along with Hex. nut and Washer.
④Fix Hex. socket head bolt with Hex. wrench and turn Hex. nut to fit G-seal.
⑤Fit G-seal on the opposite side in the same way.
⑥Fill **ISP exclusive grease [0.1ml (0.2g)]** between 2 lips of G-seal with syringe evenly around whole periphery.

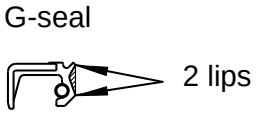

⚠ CAUTION

Danger of shorter operating lifetime and Bearing failure. **Be sure to use ISP exclusive grease.** ※Mixing with other oil can shorten grease lifetime and damage Bearings.	**Use ISP exclusive grease**

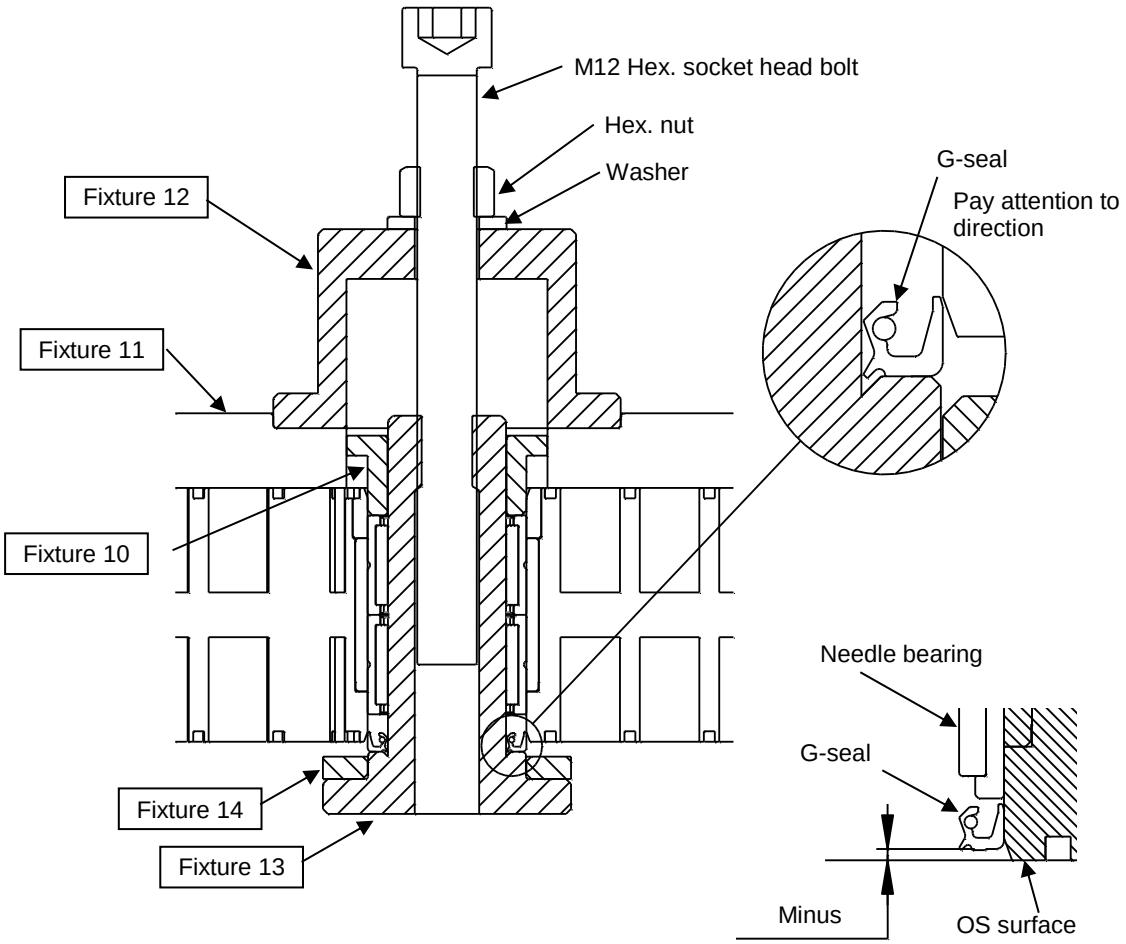

Important

- **Check direction of Fixtures and G-seal.**
  Side of G-seal where you can see spring faces Bearing.
- **Check that the top of G-seal is lower than OS surface.**
  If not, tighten further with Fixture again in the same direction.

4.7 Maintenance of Inlet flange

Do in the same way as 3.6.

4.8 Maintenance of Outlet flange

①Loosen Nut and remove Outlet flange.
②Remove O-ring inside the exhaust hole of FS(2), and clean the exhaust hole inner diameter and outlet flange by using cloth and brass brush.
③Remove C-type snap ring in the Outlet flange with snap ring pliers. Remove Exhaust guide, Exhaust spring and Exhaust valve.
④Clean exhaust flange and the exhaust hole of the exhaust flange and the sealing surface against the exhaust valve by using clean cloth and bamboo spatula so as not to damage, and blow out with air.
⑤Fit new Exhaust valve, new Exhaust spring, and new Exhaust guide into the Exhaust flange, and hold it with a new C-type snap ring. Make sure that the Exhaust valve is at the center.
⑥Fit new O-ring in the exhaust hole O-ring groove.
⑦Fit Outlet flange with Nut to FS(2),and tighten Nut and fix it.

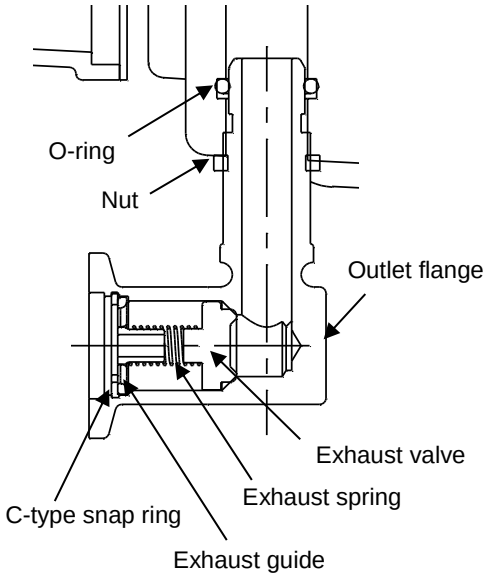

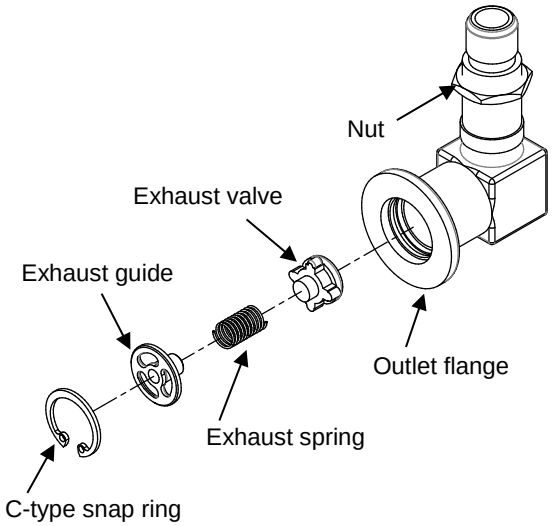

Important

Exhaust valve should be at center.

4.9 Maintenance of Air flush port

①Remove Air flush kit from pump with spanner.

②Apply slight amount of threadlocker (medium strength) e.g. LOCTITE 242 and tighten Air flush kit to pump.

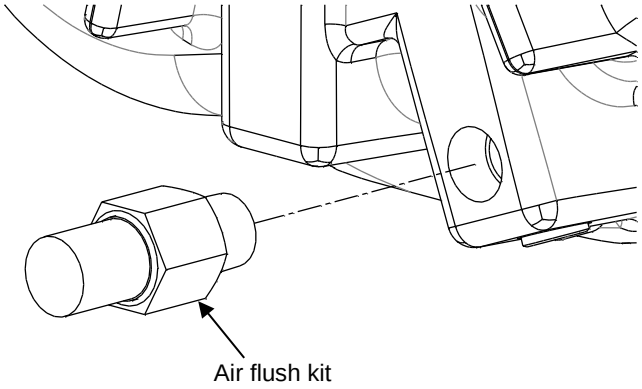

Important

- **Use threadlocker (medium strength) e.g. LOCTITE 242.**
- **Apply slight amount of threadlocker to thread section.**
- **Wipe out extruded threadlocker with clean cloth.**

4.10 Fit new Tip seal

①Place white soft back-up part facing downwards and black hard sliding material facing upwards and push into the groove by hand so that protruded portion of black sliding material is minimal.
②First insert Tip seal in accordance with the shape at the center on FS(2) side of OS and insert gradually further towards outside.
③Cut Tip seal at 2~3mm before the end of Tip seal groove by cutter (shape knife).
④Insert remaining Tip seal at the center of the groove from FS(1) side and cut at 2~3mm before the end of Tip seal groove by cutter (shape knife).
⑤Internally extruded section near the center of wrap function as a stopper to hold Tip seal. Completely push sliding material side by hand into the groove.
⑥In the same way, insert Tip seal to FS(1) side of OS, and fit remaining Tip seal to FS(2) side.

Important

- **Check that top of Tip seal comes out from the groove of FS(1), FS(2) and OS (by about 0.2mm) at any point.**
- **Tip seal height: 2.20~2.30mm**
- **Tip of scroll wrap contact with the counter surface (bottom) and damages it, resulting in failure.**

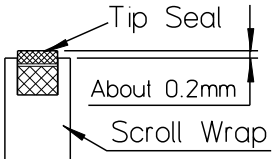

4.11 Assembly

Do in the same way as 3.7.

4.12 Break-in operation

Read the instruction manual for the Oil-Free Scroll Vacuum Pump of the corresponding type when break-in operation.

⚠ **WARNING**	
Danger of explosion and ignition **Do not evacuate gas which is hazardous to humans or explosive, flammable, or corrosive. Do not evacuate with substances containing chemicals, solvents, and powders.** If done, it can cause failure or bodily injury by gas, explosion or ignition.	**Never evacuate hazardous gas**
Danger of electric fire and electric shock **Install motor protective circuit breaker to protect motor.** If not, bodily injury due to electric fire or electric shock can result. If you have any questions about the selection of protective devices, contact either the dealer who sold it to you or us.	**Install motor protective circuit breaker to protect motor**
Danger of electric shock **Connect earth cord to earth terminal in motor terminal box.** If not, it can cause bodily injury from electric shock.	**Be sure to ground**

Important

- **When you have replaced Tip seal, do break-in operation so as to smooth Tip seal surface.**
- **Be sure to take off Exhaust valve during break-in operation.**
- **During break-in, open Inlet valve 2~3 times hourly so as to emit worm powder.**
- **This pump is common for 50Hz/60Hz.**
  Do break-in for both 50Hz and 60hz.
  When electric source is either 50Hz or 60Hz, do break-in at the same electric source as pump installation site.

Do break-in operation of Tip seal in the following way.

①Remove Exhaust valve.

②Close Inlet valve and operate at 50Hz.

③Loosen Hex. socket head bolts which fix FS(1) and FS(2), and tighten with hand till it stops.

④If current during pump operation is within +10% from rated figure (refer to “Rated current chart” on next page), continue operation as it is. If it exceeds +10% from rated figure open Inlet to atmosphere and operate for a while, then close Inlet again and check current. Repeat this procedure until current is less than 10% from rated figure.

⑤If current is less than the rated figure, tighten Hex. socket head bolts and do 24 hours continuous operation.

Tightening torque	**7.8±0.7Nm (80±7kg･cm)**

⑥Change electric source to 60Hz and do ②~⑤.

⑦Stop pump and turn off electric source.

⑧After break-in running, clean up inside the pump.

⑨Follow the procedure in 3.1.1~3.1.4. Clean up inside the pump and blow out.

⑩Wipe out dust at Exhaust valve hole with clean cloth in the same way as 3.7, blow out with air and fit Exhaust valve.

⑪Apply **ISP exclusive grease** to roller at OS Needle bearings.
Apply **ISP exclusive grease** between roller and cage while turning roller.

Grease volume [/ bearing]	0.2ml (0.4g)

⑫Evenly fill **ISP exclusive grease [0.1ml (0.2g)]** between 2 lips of OS G-seals, FS(2) G-seal and FS(2) Shaft seal around the whole periphery with syringe.

⑬Assemble in reverse order of disassembling.

⚠ CAUTION

Danger of shorter operating lifetime and Bearing failure. **Be sure to use ISP exclusive grease.** ※Mixing with other oil can shorten grease lifetime and damage Bearings.	**Use ISP exclusive grease**

4.13 Inspect pump performance

①Operate pump and measure currents.

Model	Specification	Current after break-in (when Inlet is close)
ISP-250E	1-phase 200V	1.8~2.0A
	3-phase 200V	1.3~1.5A

②Check that there is no abnormal noise and vibration. Inspect pump performance

③Inspect the ultimate pressure and leak tightness.

Unlimited pressure: ≦1.6Pa

Leak tightness: ≦1.0×10^{-7}Pa･m^3/s

4.14 Rated current chart

1-phase

Voltage V	100		115	200		230	
Frequency Hz	50	60	60	50	60	50	60
Rated current A	4.8	4.8	4.3	2.6	2.8	2.4	2.4
Rated current +10% A	5.3	5.3	4.7	2.9	3.1	2.6	2.6

3-phase

Voltage V	200		208	230	380	400	415	460
Frequency Hz	50	60	60	60	50	50	50	60
Rated current A	1.6	1.9	1.9	1.8	0.9	0.9	1.0	1.0
Rated current +10% A	1.8	2.1	2.1	2.0	1.0	1.0	1.1	1.1

5. Fixture combination chart

	Fixture No.	1-E	2-2	5	8	9B	10	11	12	13	14	15-E	17	18	20-E	21-E	22-E
FS(1)	1. Remove Shaft seal	○		○													
	2. Fit Shaft seal	○	○	○								○					
	3. Fit G-seal	○	○	○													
FS(2)	4. Remove Shaft seal	○				○			○								
	5. Fit Shaft seal	○	○	○								○					
	6. Fit G-seal	○	○	○													
OS	7. Fit G-seal						○	○	○	○	○						
FS(1)	8. Remove Ball bearing					○			○				○				
	9. Fit Ball bearing					○							○	○			
FS(2)	10. Remove Ball bearing					○			○						○		○
	11. Fit Ball bearing															○	○
OS	12. Remove Needle bearing				○	○	○	○	○								
	13. Fit Needle bearing						○	○	○	○							

6. Parts list

No.	Parts name	Quantity	No.	Parts name	Quantity
4	FS(1)	1	62	Bolt	12
5	OS	1	64	Screw	3
6	FS(2)	1	65	Bolt	3
7	Cover plate(2)	1	69	Plug	2
12	Fan cover	1	71	Washer	4
13	Fan(2)	1	107	Exhaust valve set	1
14	Parallel key	2	200	Bearing washer	1
15	Washer	2	203	Nut	1
16	Crank shaft	1	204	Rubber plate	4
24	Inlet flange	1	231	Fan spacer	1
26	Outlet flange	1	294	Inlet adapter	1
27	Cover plate(1)	1	296	Inner ring	2
29	Fan(1)	1	301	Tip seal set	1
30	Bearing case	1	302	Bearing kit	1
34	Motor set	1	303	Seal kit	1
34-2	Hour counter	1	304	O-ring kit	1
54	Coupling	1	305	Pin crank kit	1
58	Inlet filter	1	306	Air flush kit	1
61	Bolt	4			

(Consumables)

No.	Parts name	Quantity	Remarks
(20)	G-seal [OS]	2	No.303 supplied Seal set
(21)	Needle bearing [OS]	1 set	No.302 supplied Bearing kit
(23)	O-ring [FS(2)]	1	No.304 supplied O-ring set
(25)	O-rong [Inlet flange]	1	No.304 supplied O-ring set
(28-1)	Shaft seal(1) [FS(1), FS(2)]	2	No.303 supplied Seal set
(28-2)	G-seal [FS(1), FS(2)]	2	No.303 supplied Seal set
(31)	Ball bearing [FS(1), FS(2)]	2	No.302 supplied Bearing kit
(37)	O-ring [Pin crank]	6	No.302 supplied Bearing kit
(38)	Miniature ball bearing [Pin crank]	6	No.302 supplied Bearing kit
(53)	Spider	1	No.302 supplied Bearing kit
(67)	Screw	3	No.302 supplied Bearing kit
(67)	Screw	6	No.305 supplied Pin crank kit
(82)	Housing	1	No.306 supplied Air flush kit
(83)	Air-muffler	1	No.306 supplied Air flush kit
(86)	Ball	1	No.306 supplied Air flush kit
(87)	Snap ring	1	No.306 supplied Air flush kit
(101)	Tip seal set(1)	1	No.301 supplied Tip seal set
(103)	Tip seal set(2)	1	No.301 supplied Tip seal set
(104)	Pin crank set	3	No.305 supplied Pin crank kit
(202)	O-ring [Exhaust flange]	1	No.304 supplied O-ring set
(214)	O-ring [FS(1)]	1	No.304 supplied O-ring set
(295)	Inlet gasket	1	No.304 supplied O-ring set
(297)	O-ring [Inner ring]	2	No.304 supplied O-ring set
(298)	O-ring [FS(2)]	2	No.302 supplied Bearing kit

7. Extended drawing

The parts remarked by ( ), ◇, O, □, ⬡ are supplied with Set or Kit.

No.	Parts name	Component parts
107	Exhaust valve set	
301	Tip seal set [remarked by ◇]	101, 103
302	Bearing kit [remarked by O]	21, 31, 37, 38, 53, 67, 200, 298
303	Seal set [remarked by □]	20, 28-1, 28-2
304	O-ring set [remarked by ⬡]	23, 25, 202, 214, 295, 297
306	Air flush kit [remarked by ( )]	82, 83, 86, 87

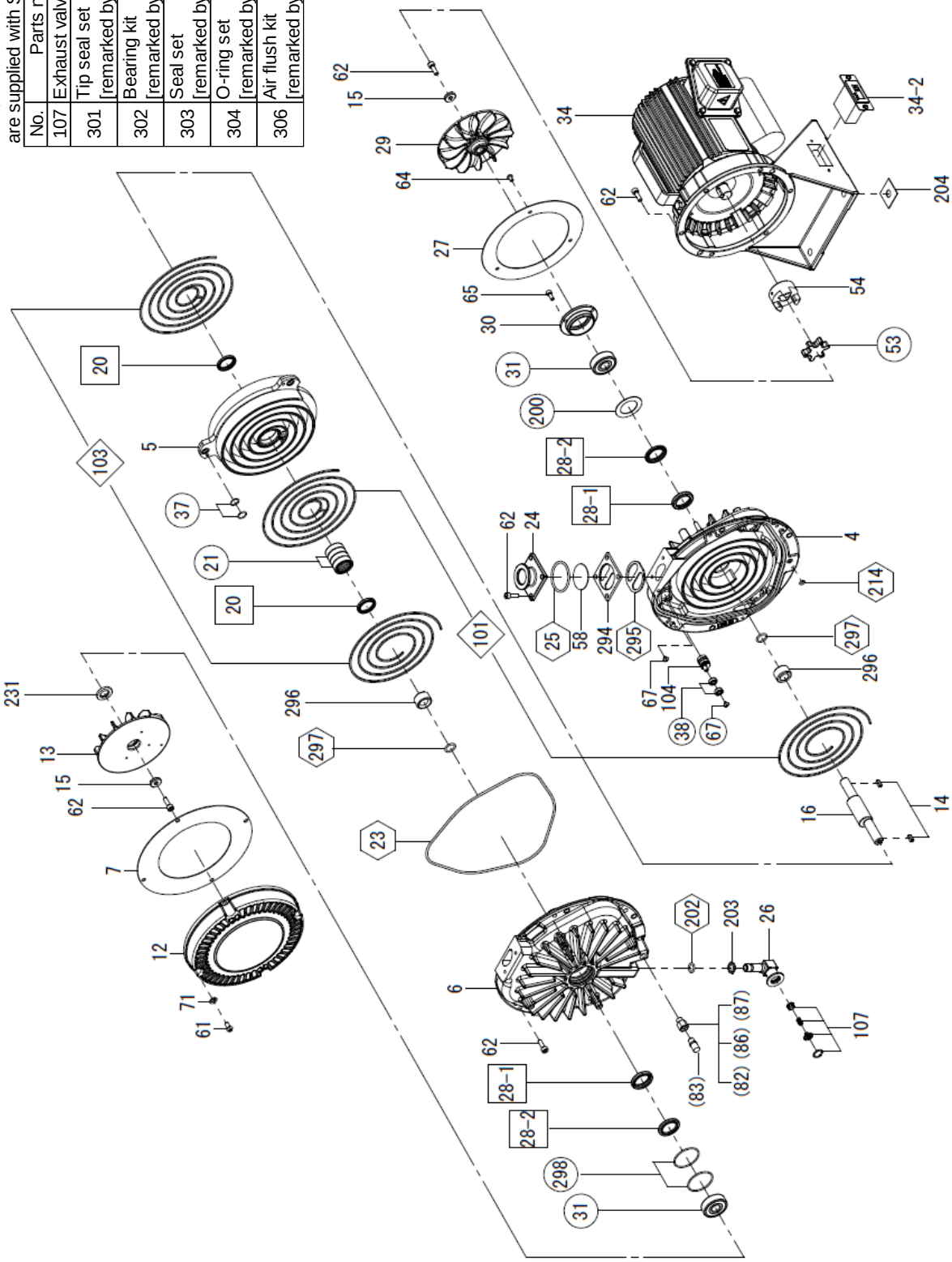

ANEST IWATA Corporation

3176,Shinyoshida-cho, Kohoku-Ku,
Yokohama 223-8501, Japan
Tel +81 (0) 45-591-1112
Fax +81 (0) 45-591-1539
http://www.anest-iwata.co.jp/

Manual No.V207-00
Code No.08822780